Introduction to operational amplifier/comparator

Toshiba has a lineup op-amps and comparators, including low-noise op-amp, input/output full-range (input/output Rail to Rail) op-amp and comparator in a small package.

We have results that have been producing op-amps and comparators for a long time

In 1991, Toshiba commercialized an op-amp TA75S01F for the bipolar process equipped in SMD package. In 1993, Toshiba commercialized an CMOS op-amp TC75S51F as an industry-leading company. Since then, it has been one of the vendors that have continued to market op-amp comparators equipped with small packages. We continue to provide a wide variety of highly reliable products based on our track record of delivering products to a large number of customers.

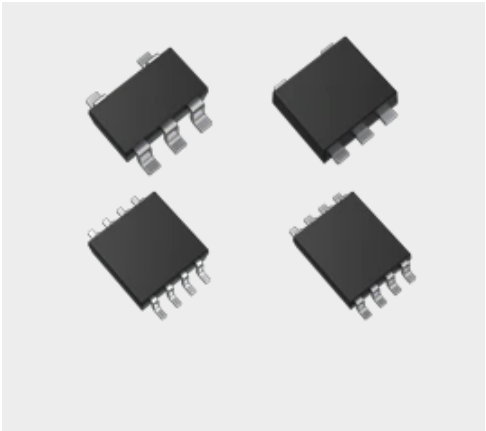

Stable supply of high-quality products at plants in Japan and Thailand

Our operational amplifiers and comparators enable high-quality and stable delivery at our plants in Japan and Thailand. We will respond sincerely and promptly to the need for rapid delivery.

Our lineup of operational amplifiers and comparators

An op-amp comparator is one of the standard analog ICs. We offer a wide lineup of products, including low-noise op-amps that are ideal for amplifying weak signals from various sensors widely iequipped in IoT devices, ultra-low current consumption types that contribute to long-life operation of devices, and I/O full-range (I/O Rail to Rail) op-amps.

Operational Amplifier Product

CMOS op-amp TC75S102F for ultra-low power consumption.

Optimization of circuitry using our CMOS processing has resulted in low current dissipation. This reduces the power consumption of the device, thus contributing to the long-term operation of IoT devices and battery-powered devices.

CMOS op-amp TC75S67TU with low-noise.

Process optimization achieves low-input-referred noise voltages. Suitable for analog front-end circuits for various sensors.

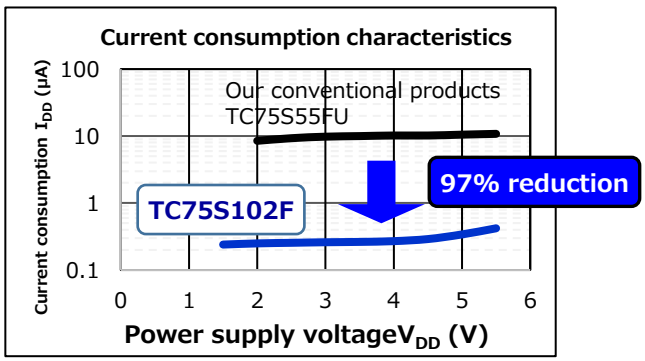

(VDD = 1.5V, VSS = GND, Ta = 25℃)

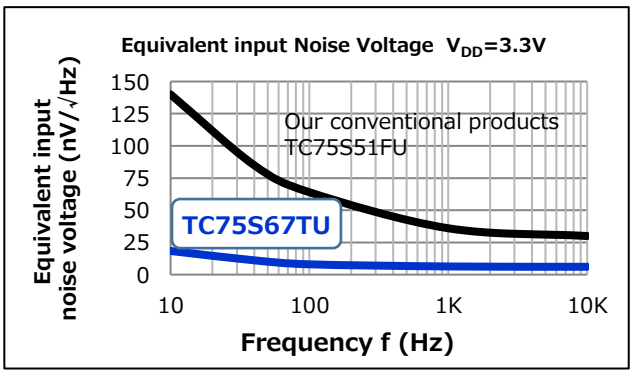

(VDD = 3.3V, VSS = GND, Ta = 25℃)

© 2022-2026
Toshiba Electronic Devices & Storage Corporation

TOSHIBA

Operational Amplifier/Comparator Technical Support

Reference Design Center

Examples of op-amp application circuits are shown on our website as reference designs.
In addition to detailed explanations of circuit examples and circuits, PCB layer diagrams, CAD data, etc. required for creating necessary parts lists and boards the report is presented.

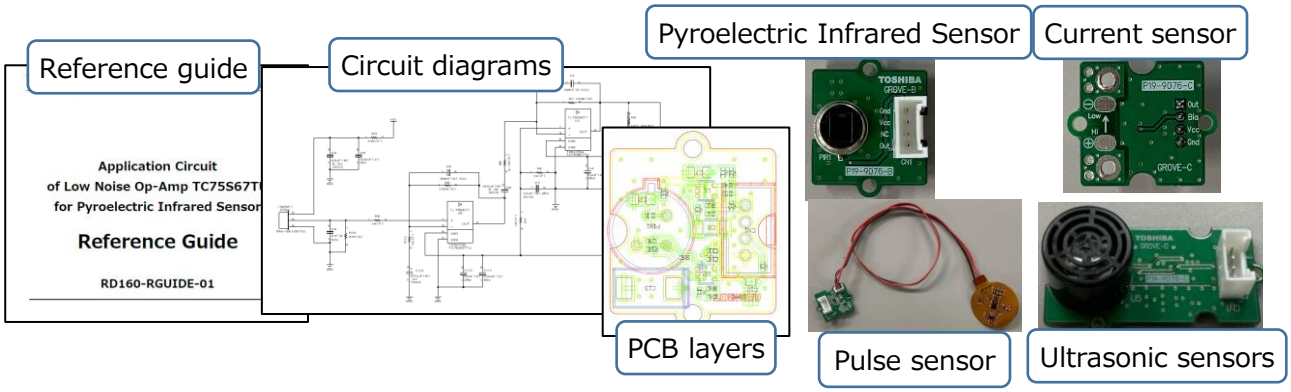

- **For a detailed example of how to use the op-amp (Reference design)**
  - Application Circuits for Current Sensor — Click
  - Application Circuit for Ultrasonic Distance Sensor — Click
  - Application Circuit for Pyroelectric Infrared Sensor — Click
  - Application Circuit for Pulse Sensor — Click

Application notes

On our website, we have an application note describing how to use the op-amp comparator, know-how, etc. It covers everything from basic contents to application contents.

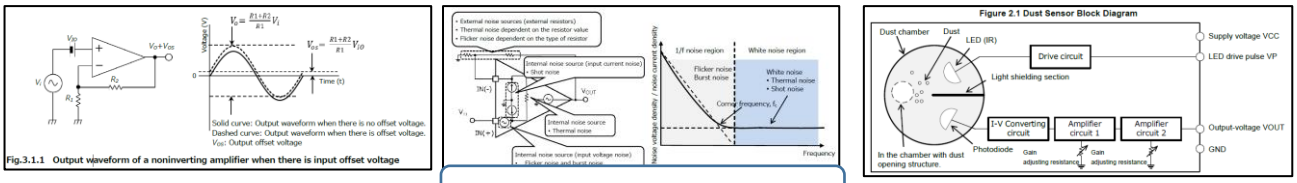

Examples of Application Notes

- **Application note**
  - Basics of Operational Amplifiers and Comparators — Click
  - CMOS Low-Noise Operational Amplifier Ideal for Sensor Signal Amplification — Click
  - Designing of low power Op Amps for Dust Sensor — Click

Technical inquiries

For technical questions, please contact our special dealer or web contact.

For web contact inquiries, go here. Click

© 2022-2026
Toshiba Electronic Devices & Storage Corporation

TOSHIBA

・Introduction to our operational amplifiers

[CMOS type, I/O full range (I/O Rail to Rail) product]

	Ultra-low current consumption	Low Current Consumption
Product name	TC75S102F	TC75S103F
Number of circuits	1in1	1in1
Power supply	Single/dual	Single/dual
Operating supply voltage	1.5V to 5.5V	1.8V to 5.5V
Current consumption	0.27μA (Typ.)	100μA (Typ.)
Input-offset voltage	1.3mV (Max.)	1.5mV (Max.)
Unity Gain Cross Frequency	0.63kHz (Typ.)	0.3MHz (Typ.)
Purchase	Buy Online	Buy Online
Package Name	SMV 2.9×2.8×1.1mm	SMV 2.9×2.8×1.1mm

[CMOS type, low-noise product]

	Super Low Noise	Low Noise and Low Current Consumption
Product name	TC75S67TU	TC75S63TU
Number of circuits	1in1	1in1
Power supply	Single/dual	Single/dual
Operating supply voltage	2.2V to 5.5V	2.2V to 5.5V
Equivalent input Noise Voltage (@1 kHz)	6nV/√Hz (Typ.)	7.8nV/√Hz (Typ.)
Current consumption	500μA (Typ.)@2.5V	480μA (Typ.)@2.5V
Purchase	Buy Online	Buy Online
Package Name	UFV 2.0×2.1×0.7mm	UFV 2.0×2.1×0.7mm

SMV package
(SOT-25/SC-74A)
2.9×2.8×1.1mm



UFV package
(SOT-353F)
2.0×2.1×0.7mm



© 2022-2026
Toshiba Electronic Devices & Storage Corporation

TOSHIBA

・Introduction to our operational amplifiers

[CMOS type, general-purpose products]

	Low Voltage Operation and Low Current Consumption			
Product name	TC75S51F	TC75S51FU	TC75W51FU	TC75W51FK
Number of circuits	1in1		2in1	
Power supply	Single/dual			
Operating supply voltage	1.5V to 7V			
Current consumption	50μA (Typ.)		100μA (Typ.)	
Unity Gain Cross Frequency	0.5MHz (Typ.)			
Purchase	Buy Online	Buy Online	Buy Online	Buy Online
Package Name	SMV 2.9×2.8×1.1mm	USV 2.0×2.1×0.9mm	SM8 2.9×4.0×1.1mm	US8 2.0×3.1×0.7mm

	Low Current Consumption Type			
Product name	TC75S54F	TC75S54FU	TC75W54FU	TC75W54FK
Number of circuits	1in1		2in1	
Power supply	Single/dual			
Operating supply voltage	1.8V to 7V			
Current consumption	100μA (Typ.)		200μA (Typ.)	
Unity Gain Cross Frequency	0.8MHz (Typ.)			
Purchase	Buy Online	Buy Online	Buy Online	Buy Online
Package Name	SMV 2.9×2.8×1.1mm	USV 2.0×2.1×0.9mm	SM8 2.9×4.0×1.1mm	US8 2.0×3.1×0.7mm

SMV package (SOT-25/SC-74A) 2.9×2.8×1.1mm



USV package (SOT-353/SC-88A) 2.0×2.1×0.9mm



SM8 package (SOT-505) 2.9×4.0×1.1mm



US8 package (SOT-765) 2.0×3.1×0.7mm



© 2022-2026
Toshiba Electronic Devices & Storage Corporation

TOSHIBA

・Introduction to our operational amplifiers

[CMOS type, general-purpose products]

	Ultra-low current consumption			
Product name	TC75S55F	TC75S55FU	TC75W55FU	TC75W55FK
Number of circuits	1in1		2in1	
Power supply	Single/dual			
Power voltage for driving	1.8V to 7V			
Current consumption	8μA (Typ.)		16μA (Typ.)	
Cutoff frequency	140kHz (Typ.)			
Purchase	Buy Online	Buy Online	Buy Online	Buy Online
Package Name	SMV 2.9×2.8×1.1mm	USV 2.0×2.1×0.9mm	SM8 2.9×4.0×1.1mm	US8 2.0×3.1×0.7mm

SMV package
(SOT-25/SC-74A)
2.9×2.8×1.1mm



USV package
(SOT-353/SC-88A)
2.0×2.1×0.9mm



SM8 package
(SOT-505)
2.9×4.0×1.1mm



US8 package
(SOT-765)
2.0×3.1×0.7mm



© 2022-2026
Toshiba Electronic Devices & Storage Corporation

TOSHIBA

・Introduction to our comparator

[CMOS type, Push-pull output product]

	Ultra-low current consumption			
Product name	TC75S56F	TC75S56FU	TC75W56FU	TC75W56FK
Output circuit type	Push-pull output			
Number of circuits	1in1		2in1	
Power supply	Single/dual			
Operating supply voltage	1.8V to 7V			
Current consumption	10μA (Typ.)		20μA (Typ.)	
Purchase	Buy Online	Buy Online	Buy Online	Buy Online
Package Name	SMV 2.9×2.8×1.1mm	USV 2.0×2.1×0.9mm	SM8 2.9×4.0×1.1mm	US8 2.0×3.1×0.7mm

	Low Current Consumption Type			
Product name	TC75S57F	TC75S57FU	TC75W57FU	TC75W57FK
Output circuit type	Push-pull output			
Number of circuits	1in1		2in1	
Power supply	Single/dual			
Operating supply voltage	1.8V to 7V			
Current consumption	100μA (Typ.)		200μA (Typ.)	
Purchase	Buy Online	Buy Online	Buy Online	Buy Online
Package Name	SMV 2.9×2.8×1.1mm	USV 2.0×2.1×0.9mm	SM8 2.9×4.0×1.1mm	US8 2.0×3.1×0.7mm

SMV package (SOT-25/SC-74A) 2.9×2.8×1.1mm



USV package (SOT-353/SC-88A) 2.0×2.1×0.9mm



SM8 package (SOT-505) 2.9×4.0×1.1mm



US8 package (SOT-765) 2.0×3.1×0.7mm



© 2022-2026
Toshiba Electronic Devices & Storage Corporation

TOSHIBA

・Introduction to our comparator

[CMOS type, Open drain output product]

	Ultra-low current consumption type			
Product name	TC75S58F	TC75S58FU	TC75W58FU	TC75W58FK
Output circuit type	Open drain output			
Number of circuits	1in1		2in1	
Power supply	Single/dual			
Operating supply voltage	1.8V to 7V			
Current consumption	10μA (Typ.)		20μA (Typ.)	
Purchase	Buy Online	Buy Online	Buy Online	Buy Online
Package Name	SMV 2.9×2.8×1.1mm	USV 2.0×2.1×0.9mm	SM8 2.9×4.0×1.1mm	US8 2.0×3.1×0.7mm

	Low Current Consumption Type			
Product name	TC75S59F	TC75S59FU	TC75W59FU	TC75W59FK
Output circuit type	Open drain output			
Number of circuits	1in1		2in1	
Power supply	Single/dual			
Operating supply voltage	1.8V to 7V			
Current consumption	100μA (Typ.)		200μA (Typ.)	
Purchase	Buy Online	Buy Online	Buy Online	Buy Online
Package Name	SMV 2.9×2.8×1.1mm	USV 2.0×2.1×0.9mm	SM8 2.9×4.0×1.1mm	US8 2.0×3.1×0.7mm

SMV package (SOT-25/SC-74A) 2.9×2.8×1.1mm



USV package (SOT-353/SC-88A) 2.0×2.1×0.9mm



SM8 package (SOT-505) 2.9×4.0×1.1mm



US8 package (SOT-765) 2.0×3.1×0.7mm



© 2022-2026
Toshiba Electronic Devices & Storage Corporation

TOSHIBA

・Introduction to our comparator

[CMOS type I/O full range (I/O Rail to Rail) product]

	High Speed Response Type		
Product name	TC75W71FU	TC75W72FU	TC75W73FU
Output circuit type	Push-pull output		
Number of circuits	2in1		
Power supply	Single/dual		
Operating supply voltage	1.8V to 5.5V		
Current consumption	276μA (Typ.)		
Input Offset Voltage	17mV		
Input Hysteresis Voltage	–	3.5mV	
L to H Propagation Delay	28ns		–
H to L Propagation Delay	19ns		16ns
Purchase	Buy Online	Buy Online	Buy Online
Package Name	SM8 2.9×4.0×1.1mm		

SM8 package
(SOT-505)
2.9×4.0×1.1mm



Related LINK

- **Toshiba Operational Amplifier website** — Click
- **Parametric search for Toshiba Operational Amplifier** — Click
- **FAQ for Operational Amplifier Comparators** — Click
- **Stock Check & Purchase** — Click
- **Cross-reference search here** — Click

*Company names, product names, and service names may be trademarks of their respective companies.

RESTRICTIONS ON PRODUCT USE

Toshiba Corporation and its subsidiaries and affiliates are collectively referred to as “TOSHIBA”.
Hardware, software and systems described in this document are collectively referred to as “Product”.

- TOSHIBA reserves the right to make changes to the information in this document and related Product without notice.
- This document and any information herein may not be reproduced without prior written permission from TOSHIBA. Even with TOSHIBA's written permission, reproduction is permissible only if reproduction is without alteration/omission.
- Though TOSHIBA works continually to improve Product's quality and reliability, Product can malfunction or fail. Customers are responsible for complying with safety standards and for providing adequate designs and safeguards for their hardware, software and systems which minimize risk and avoid situations in which a malfunction or failure of Product could cause loss of human life, bodily injury or damage to property, including data loss or corruption. Before customers use the Product, create designs including the Product, or incorporate the Product into their own applications, customers must also refer to and comply with (a) the latest versions of all relevant TOSHIBA information, including without limitation, this document, the specifications, the data sheets and application notes for Product and the precautions and conditions set forth in the "TOSHIBA Semiconductor Reliability Handbook" and (b) the instructions for the application with which the Product will be used with or for. Customers are solely responsible for all aspects of their own product design or applications, including but not limited to (a) determining the appropriateness of the use of this Product in such design or applications; (b) evaluating and determining the applicability of any information contained in this document, or in charts, diagrams, programs, algorithms, sample application circuits, or any other referenced documents; and (c) validating all operating parameters for such designs and applications. TOSHIBA ASSUMES NO LIABILITY FOR CUSTOMERS' PRODUCT DESIGN OR APPLICATIONS.
- PRODUCT IS NEITHER INTENDED NOR WARRANTED FOR USE IN EQUIPMENTS OR SYSTEMS THAT REQUIRE EXTRAORDINARILY HIGH LEVELS OF QUALITY AND/OR RELIABILITY, AND/OR A MALFUNCTION OR FAILURE OF WHICH MAY CAUSE LOSS OF HUMAN LIFE, BODILY INJURY, SERIOUS PROPERTY DAMAGE AND/OR SERIOUS PUBLIC IMPACT ("UNINTENDED USE"). Except for specific applications as expressly stated in this document, Unintended Use includes, without limitation, equipment used in nuclear facilities, equipment used in the aerospace industry, Class 3 medical devices, equipment used for automobiles, and military vehicles and munitions. IF YOU USE PRODUCT FOR UNINTENDED USE, TOSHIBA ASSUMES NO LIABILITY FOR PRODUCT. For details, please contact your TOSHIBA sales representative or contact us via our website.
- Do not disassemble, analyze, reverse-engineer, alter, modify, translate or copy Product, whether in whole or in part.
- Product shall not be used for or incorporated into any products or systems whose manufacture, use, or sale is prohibited under any applicable laws or regulations.
- The information contained herein is presented only as guidance for Product use. No responsibility is assumed by TOSHIBA for any infringement of patents or any other intellectual property rights of third parties that may result from the use of Product. No license to any intellectual property right is granted by this document, whether express or implied, by estoppel or otherwise.
- ABSENT A WRITTEN SIGNED AGREEMENT, EXCEPT AS PROVIDED IN THE RELEVANT TERMS AND CONDITIONS OF SALE FOR PRODUCT, AND TO THE MAXIMUM EXTENT ALLOWABLE BY LAW, TOSHIBA (1) ASSUMES NO LIABILITY WHATSOEVER, INCLUDING WITHOUT LIMITATION, INDIRECT, CONSEQUENTIAL, SPECIAL, OR INCIDENTAL DAMAGES OR LOSS, INCLUDING WITHOUT LIMITATION, LOSS OF PROFITS, LOSS OF OPPORTUNITIES, BUSINESS INTERRUPTION AND LOSS OF DATA, AND (2) DISCLAIMS ANY AND ALL EXPRESS OR IMPLIED WARRANTIES AND CONDITIONS RELATED TO SALE, USE OF PRODUCT, OR INFORMATION, INCLUDING WARRANTIES OR CONDITIONS OF MERCHANTABILITY, FITNESS FOR A PARTICULAR PURPOSE, ACCURACY OF INFORMATION, OR NONINFRINGEMENT.
- Do not use or otherwise make available Product or related software or technology for any military purposes, including without limitation, for the design, development, use, stockpiling or manufacturing of nuclear, chemical, or biological weapons or missile technology products (mass destruction weapons). Product and related software and technology may be controlled under the applicable export laws and regulations including, without limitation, the Japanese Foreign Exchange and Foreign Trade Law and the U.S. Export Administration Regulations. Export and re-export of Product or related software or technology are strictly prohibited except in compliance with all applicable export laws and regulations.
- Please contact your TOSHIBA sales representative for details as to environmental matters such as the RoHS compatibility of Product. Please use Product in compliance with all applicable laws and regulations that regulate the inclusion or use of controlled substances, including without limitation, the EU RoHS Directive. TOSHIBA ASSUMES NO LIABILITY FOR DAMAGES OR LOSSES OCCURRING AS A RESULT OF NONCOMPLIANCE WITH APPLICABLE LAWS AND REGULATIONS.

Toshiba Electronic Devices & Storage Corporation

https://toshiba.semicon-storage.com/

© 2022-2026
Toshiba Electronic Devices & Storage Corporation