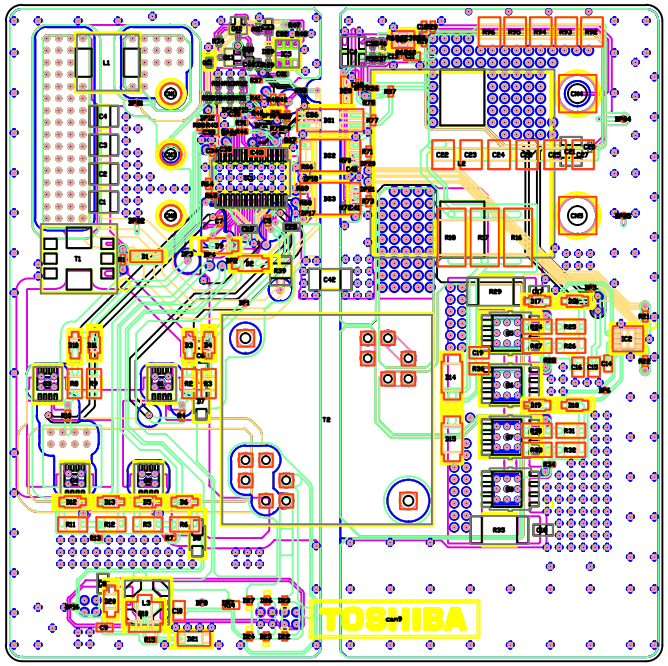

Control Num.	TITLE	Function	Sheet Num.	Rev.	Data
RD024-LAYER-01	300W Isolated DC-DC Converter		1/1	00	2018-07-12

(C) Copyright 2018 Toshiba Electronic Devices & Storage Corporation