TOSHIBA

R23

IH Rice Cooker

Solution Proposal by Toshiba

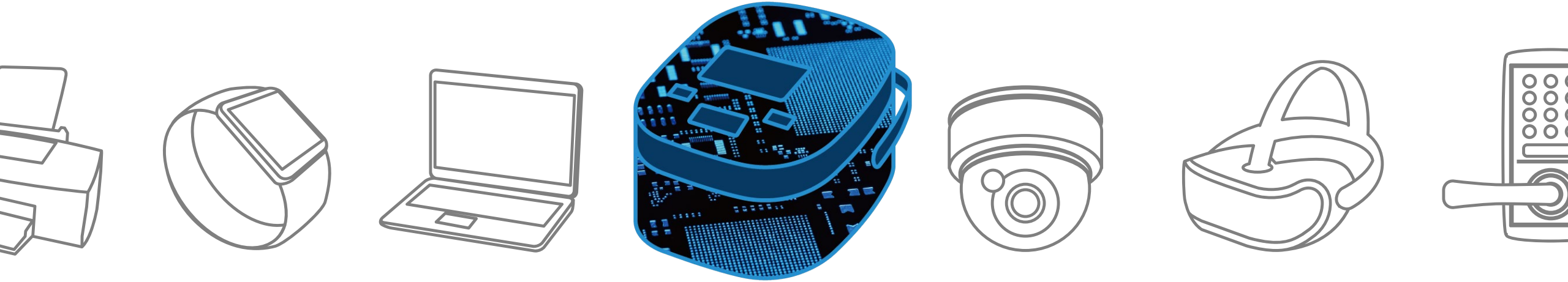

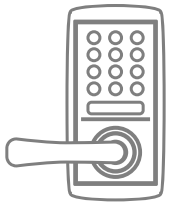

Toshiba Electronic Devices & Storage Corporation provides comprehensive device solutions to customers developing new products by applying its thorough understanding of the systems acquired through the analysis of basic product designs.

Block Diagram

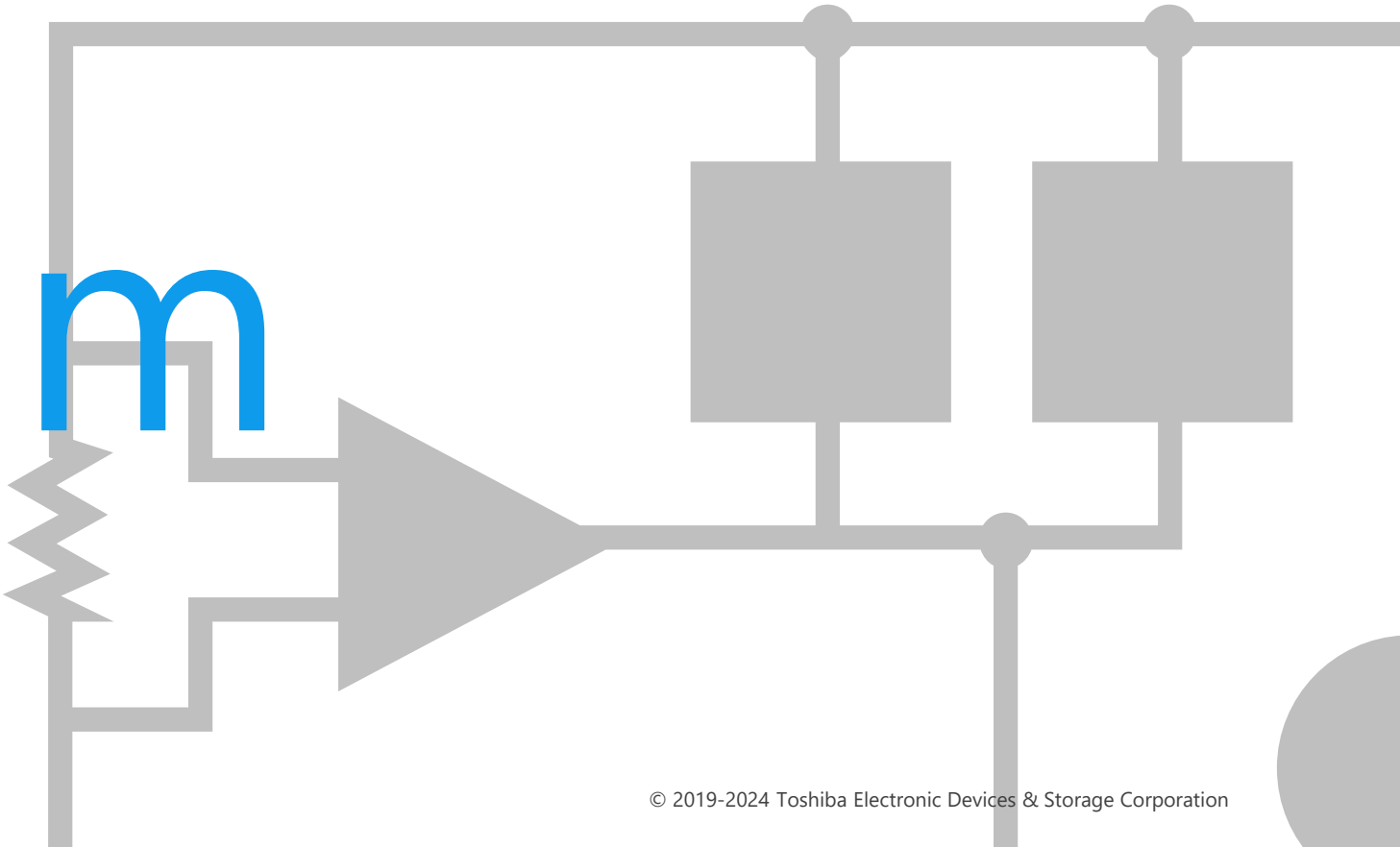

IH Rice Cooker　Overall block diagram

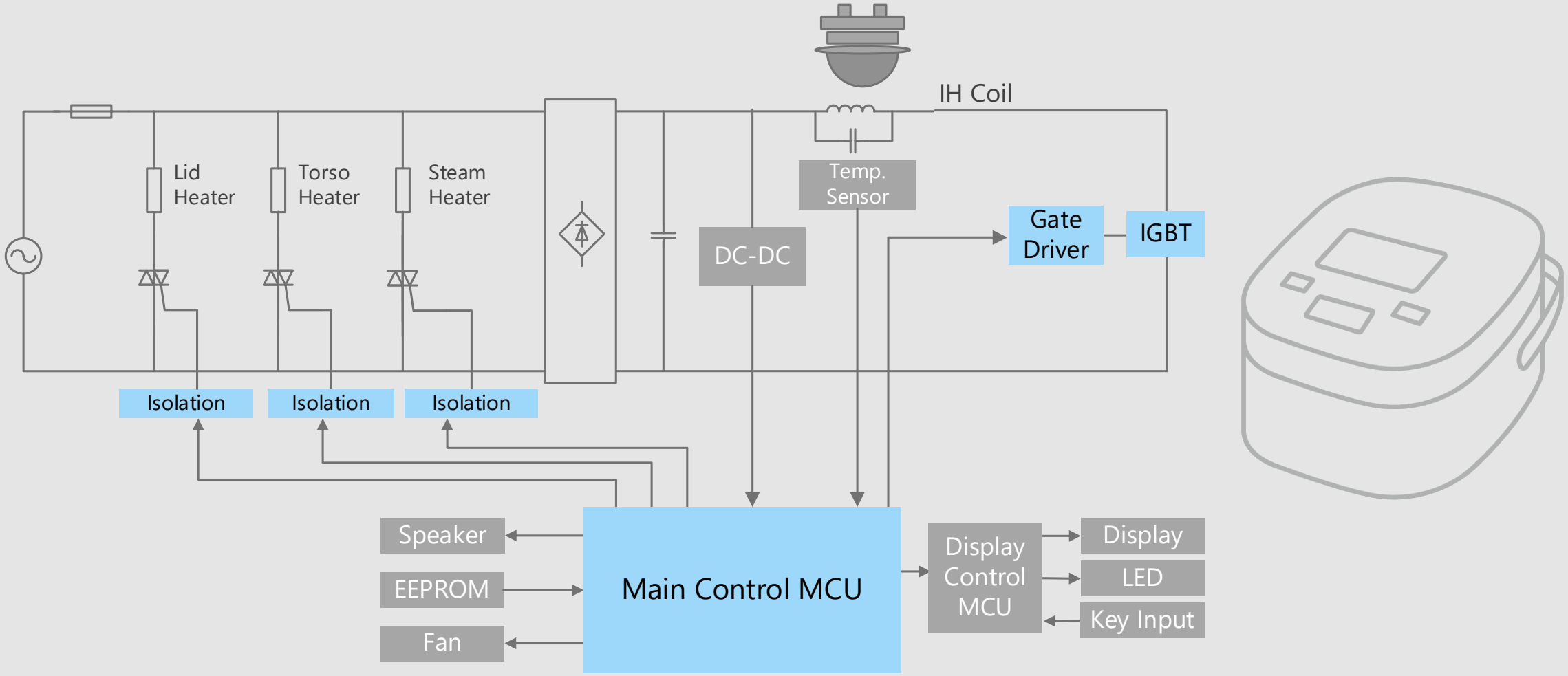

IH Rice Cooker　Detail of IH coil drive unit

IH coil drive circuit (using gate driver coupler)

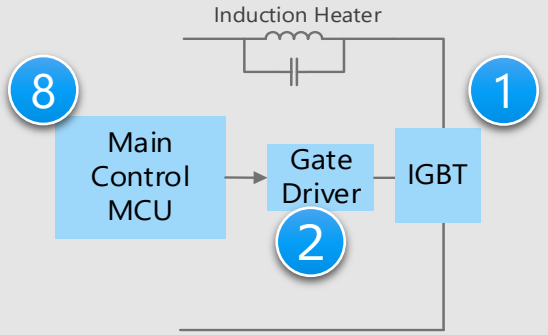

IH coil drive circuit (using discrete components)

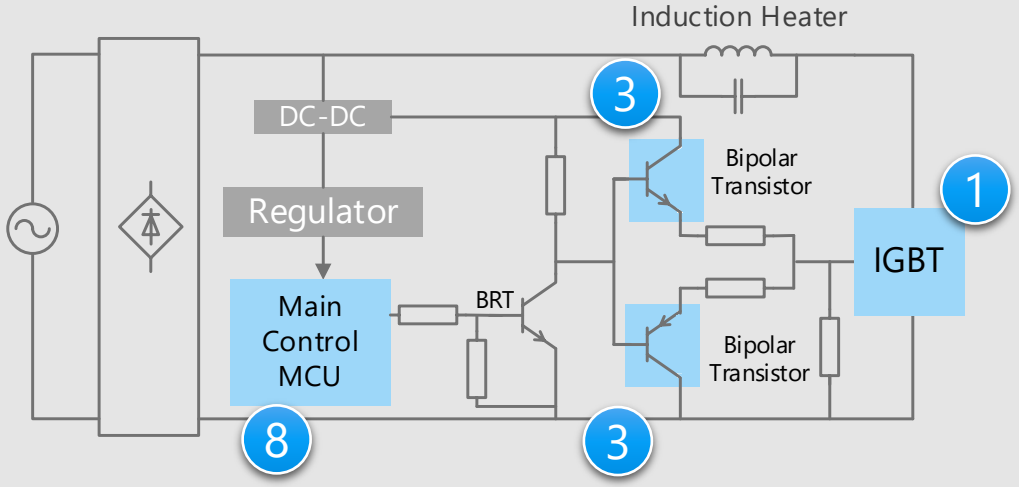

* Click the number in the circuit diagram to jump to the detailed description page

Criteria for device selection

- High speed switching and low saturation voltage characteristics are required for IGBT.
- Small package products contribute to the reduction of circuit board area.
- Rail-to-Rail output, low voltage driving and low current consumption are required for gate driver to realize low power consumption of the set.
- System control requires a MCU for sensor monitoring, high speed data processing and various heaters.

Proposals from Toshiba

- **High speed and high efficiency switching are realized** (1)
  Discrete IGBT
- **High efficiency due to rail-to-rail characteristics is realized** (2)
  IGBT gate driver coupler
- **Contribute to reduction of switching loss** (3)
  Bipolar transistor for IGBT gate drive
- **High efficient processing of multiple input and output data** (8)
  Main control MCU

IH Rice Cooker　Detail of fan motor drive / LED drive unit

Fan motor drive circuit

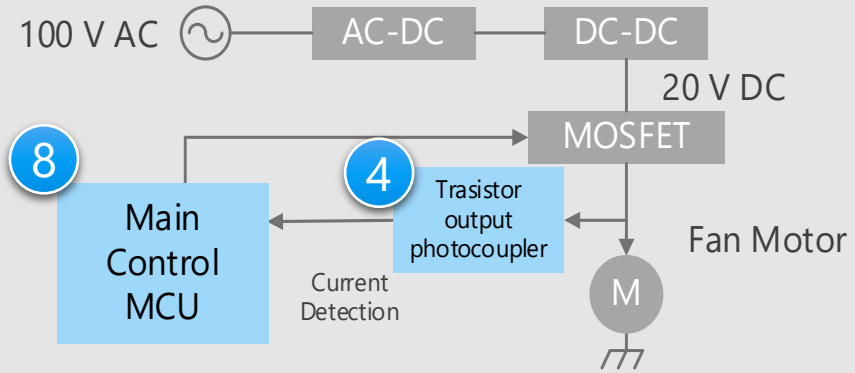

LED driving circuit

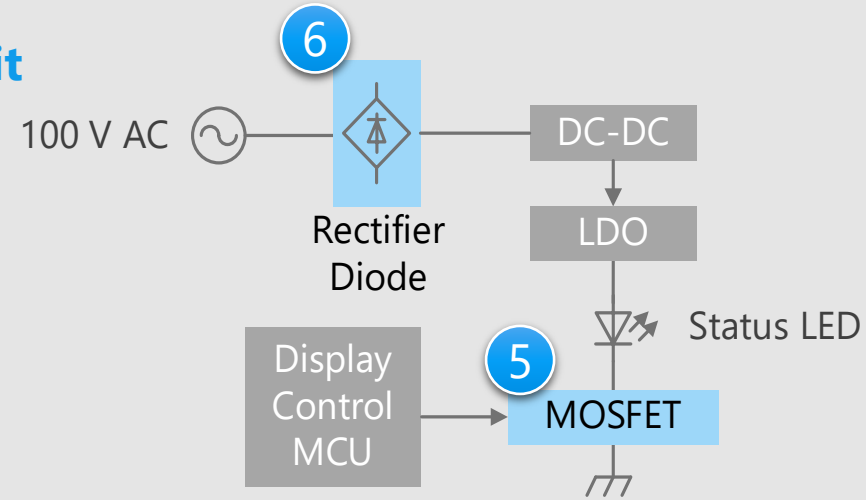

* Click the number in the circuit diagram to jump to the detailed description page

Criteria for device selection

- MOSFET with low on-resistance characteristic contributes to low loss of the set.
- Small package products contribute to the reduction of circuit board area.
- System control requires a MCU for sensor monitoring, high speed data processing and various heaters.

Proposals from Toshiba

- **High current transfer ratio and high temperature operation are realized**
  Transistor output photocoupler　4
- **Low on-resistance realizes a set with low power consumption**
  U-MOS Series MOSFET　5
- **Small surface mount package suitable for high density mounting**
  Rectifier diode　6
- **High efficient processing of multiple input and output data**
  Main control MCU　8

IH Rice Cooker　Detail of heater control unit

Heater control circuit

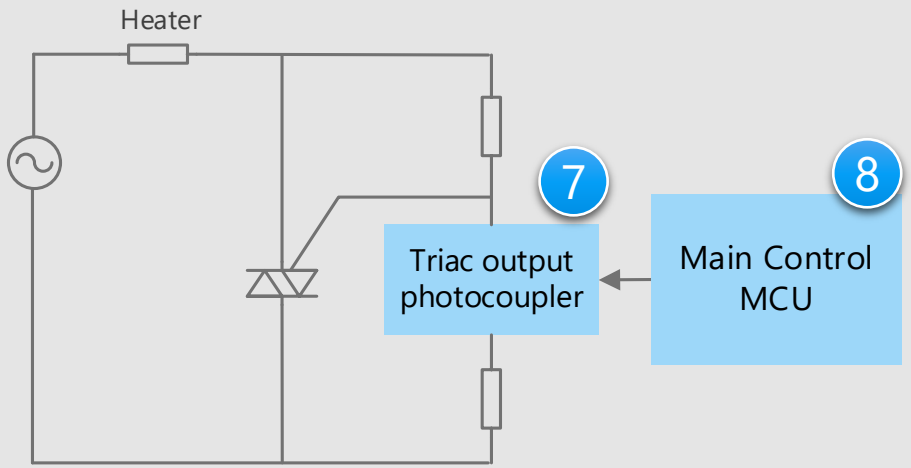

* Click the number in the circuit diagram to jump to the detailed description page

Criteria for device selection

- A triac output photocoupler is suitable for control AC load.
- System control requires a MCU for sensor monitoring, high speed data processing and various heaters.

Proposals from Toshiba

- **Efficient control of AC load is realized**
  Triac output photocoupler 7
- **High efficient processing of multiple input and output data**
  Main control MCU 8

Recommended Devices

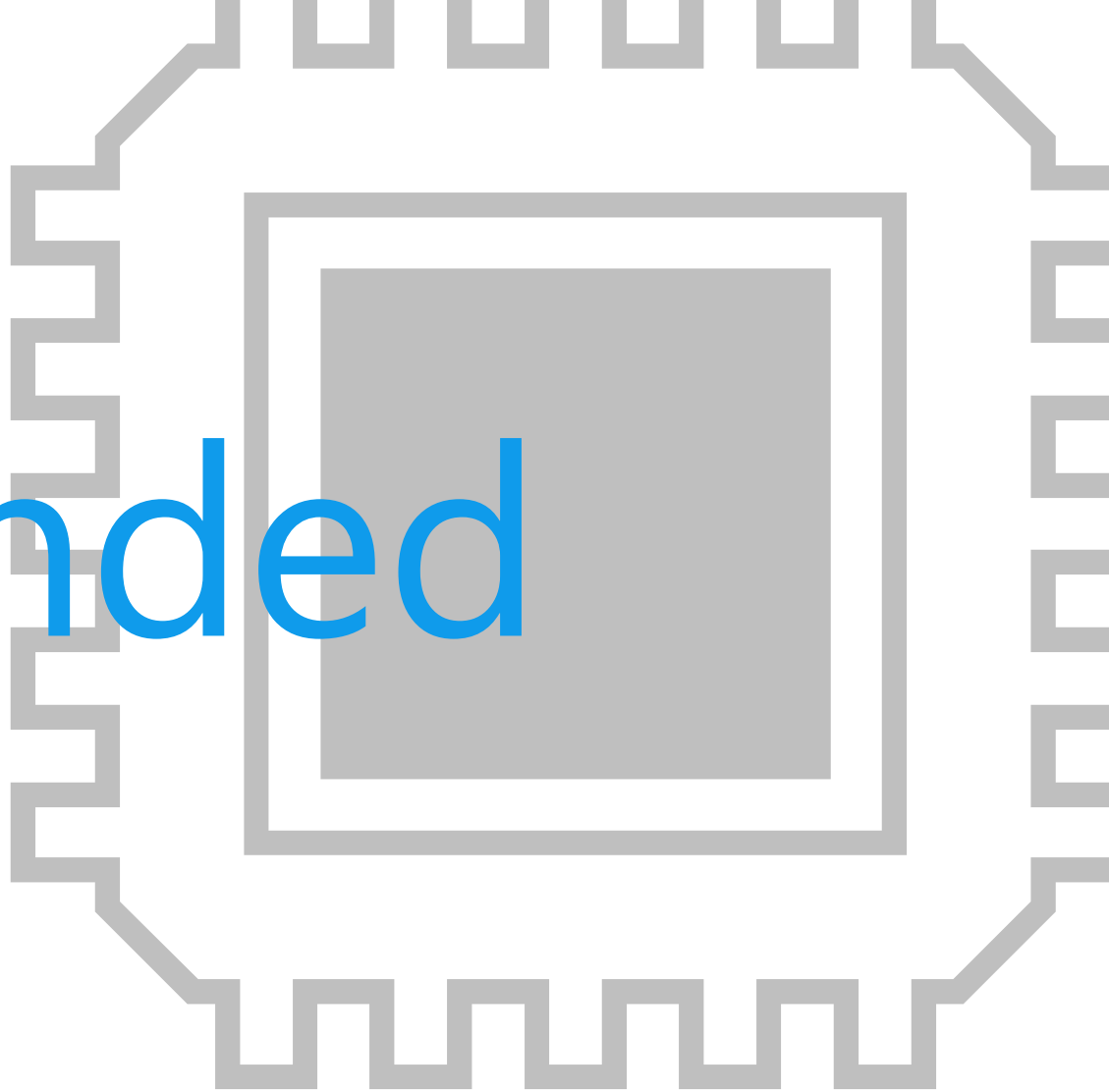

Device solutions to address customer needs

As described above, in order to design IH Rice Cooker, **“Compatibility with AC voltage in each country”**, **“Low power consumption of set”** and **“Miniaturization of circuit boards”** are important factors. Toshiba’s proposals are based on these three solution perspectives.

Compatibility with AC voltage in each country	Low power consumption of set	Miniaturization of circuit boards
High breakdown voltage	**High efficiency • Low loss**	**Small size packages**

Device solutions to address customer needs

	High breakdown voltage	High efficiency • Low loss	Small size packages
1 Discrete IGBT	●	●	
2 IGBT gate driver coupler	●	●	●
3 Bipolar transistor for IGBT gate drive		●	●
4 Transistor output photocoupler		●	●
5 U-MOS Series MOSFET		●	●
6 Rectifier diode	●	●	●
7 Triac output photocoupler	●	●	●
8 Main control MCU		●	●

1 Discrete IGBT

GT30J110SRA / GT20N135SRA / GT30N135SRA

High breakdown voltage | High efficiency • Low loss | Small size packages

Value provided

High speed switching and low saturation voltage characteristics contribute to high efficiency.

1 High speed switching

Reducing switching loss through high speed operation contributes to higher inverter efficiency.

2 Low saturation voltage

Saturation voltage is kept low while realizing high speed switching.

3 Enhancement type

Enhancement type is easy to handle because no collector current flows when no gate voltage is applied.

GT30J110SRA
Characteristics Curves

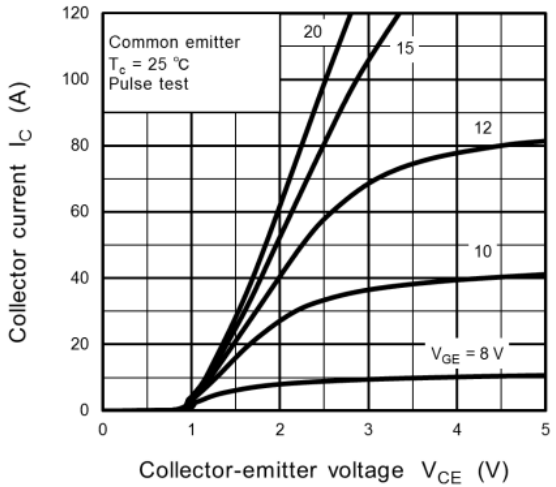

Lineup

Part number	GT30J110SRA	GT20N135SRA	GT30N135SRA
Package	TO-3P(N) 	TO-247 	
V_{CES} [V]	1100	1350	1350
t_f (Typ.) [μs]	0.17 @I_C = 60 A	0.25 @I_C = 40 A	0.25 @I_C = 60 A
$V_{CE(sat)}$ (Typ.) [V]	2.15 @I_C = 60 A	2.0 @I_C = 40 A	2.15 @I_C = 60 A

◆Return to Block Diagram TOP

2a IGBT gate driver coupler

TLP5771H / TLP5772H / TLP5774H / TLP5751H / TLP5752H / TLP5754H

High breakdown voltage | High efficiency · Low loss | Small size packages

Value provided

Rail to Rail output enables the system to operate stably and reduce conduction losses.

1 Rail to Rail output

These driver couplers generate a full swing voltage output signal and contribute to low power consumption.

2 Small package

These driver couplers are 50 % smaller than the DIP8 package [Note] and meet the reinforced insulation class requirements of international safety standards.

3 Operational ambient temperature range 125 °C

These driver couplers are designed to operate under severe ambient temperature conditions.

[Note] Comparison with Toshiba products

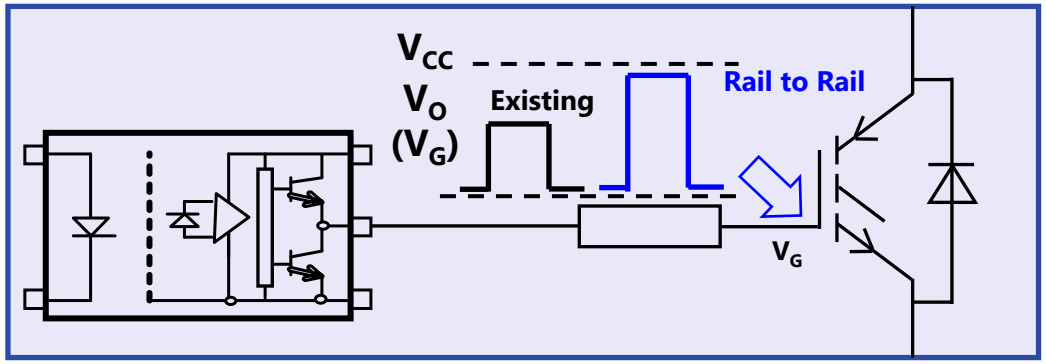

Lineup

Part number	TLP5771H	TLP5772H	TLP5774H	TLP5751H	TLP5752H	TLP5754H
Package	SO6L 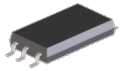			SO6L 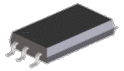		
I_{OP} (Max) [A]	±1	±2.5	±4	±1	±2.5	±4
t_{pHL}/t_{pLH} (Max) [ns]	150			150		
BV_S [Vrms]	5000			5000		
T_{opr} [°C]	-40 to 125			-40 to 125		
V_{CC} [V]	10 to 30			15 to 30		
I_{FLH} (Max) [mA]	2			4		

◆Return to Block Diagram TOP

2b IGBT gate driver coupler

TLP5231 (Smart Gate Driver Coupler)

High breakdown voltage | High efficiency · Low loss | Small size packages

Value provided

The built-in various protective functions make it easy to design the gate drive circuit.

1 Protective Functions

TLP5231 delivers various built-in functions [Note], including an overcurrent detection by monitoring collector voltage.

[Note] Gate signal soft turn off, fault feedback function

2 Rail to Rail output

TLP5231 generates a full swing voltage output signal and contributes to low power consumption.

3 Operational ambient temperature range 110 °C

TLP5231 is designed to operate under severe ambient temperature conditions.

Example Application Circuit

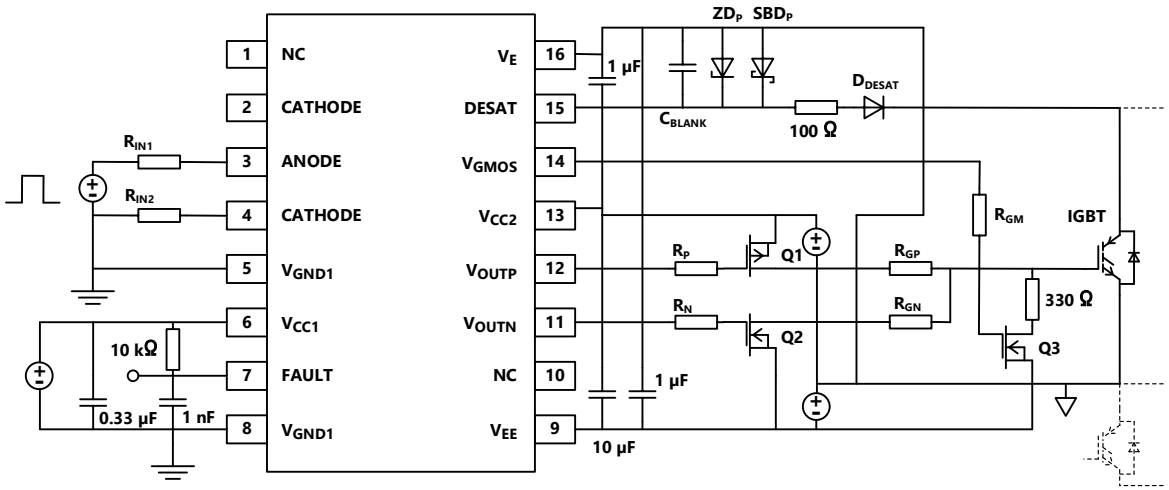

Lineup

Part number	TLP5231
Package	SO16L 
I_{OP} (Max) [A]	±2.5
t_{pHL}/t_{pLH} (Max) [ns]	300
BV_S [Vrms]	5000
T_{opr} [°C]	-40 to 110
$V_{CC2} - V_{EE}$ [V]	21.5 to 30
I_{FHL} (Max) [mA]	3.5

◆Return to Block Diagram TOP

3 Bipolar transistor for IGBT gate drive

HN4B101J / HN4B102J / TPCP8901 / TPCP8902

High breakdown voltage | High efficiency · Low loss | Small size packages

Value provided

High speed switching characteristics and high h_{FE} performance enable the system to have higher frequencies and lower losses.

1 High speed switching operation

These transistors have high speed switching characteristic suitable for high frequency equipment.

2 High DC current gain (h_{FE})

Maximum rating of collector current and DC current gain is improved for larger IGBT gate capacitance.

3 Small and thin package

Both PNP and NPN type are mounted on one small surface mount package to reduce mounting area.
Emitter terminals of PS-8 package is independent, so it is easy to divide the gate resistance ON/OFF.

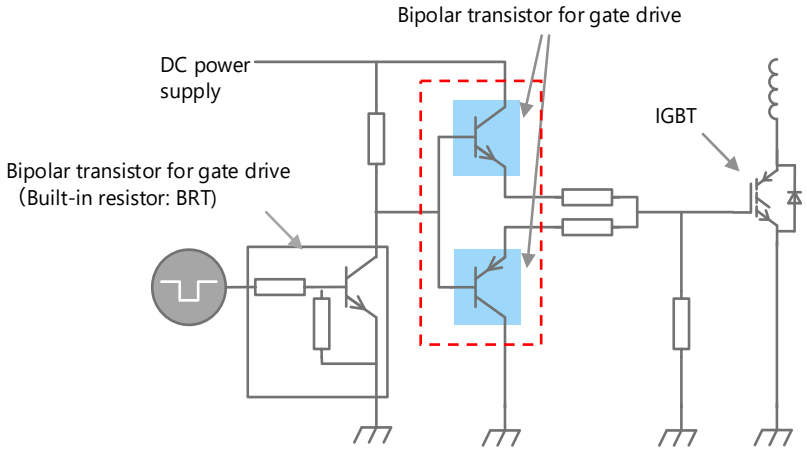

Lineup

Part number	HN4B101J	HN4B102J	TPCP8901	TPCP8902
Package	SMV		PS-8	
Internal structure (Top View)	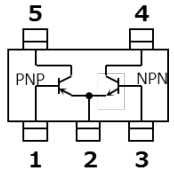		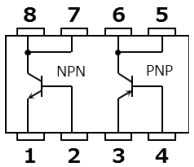	
V_{CEO} [V] (PNP / NPN)	-30 / 30	-30 / 30	-50 / 50	-30 / 30
I_{CP} [A] (PNP / NPN)	-5 / 5	-8 / 8	-5 / 5	-8 / 8

◆Return to Block Diagram TOP

4 Transistor output photocoupler

TLP183 / TLP185(SE

High breakdown voltage | High efficiency · Low loss | Small size packages

Value provided

High CTR (Current Transfer Ratio) is realized even in low input current range (I_F = 0.5 mA).

1 High current transfer ratio

TLP183 is a high-isolation photocoupler that optically couples a phototransistor and high output infrared LED. Compared to TLP185(SE (Toshiba's conventional product), high CTR (Current Transfer Ratio) in low input current range (@I_F = 0.5 mA) is realized.

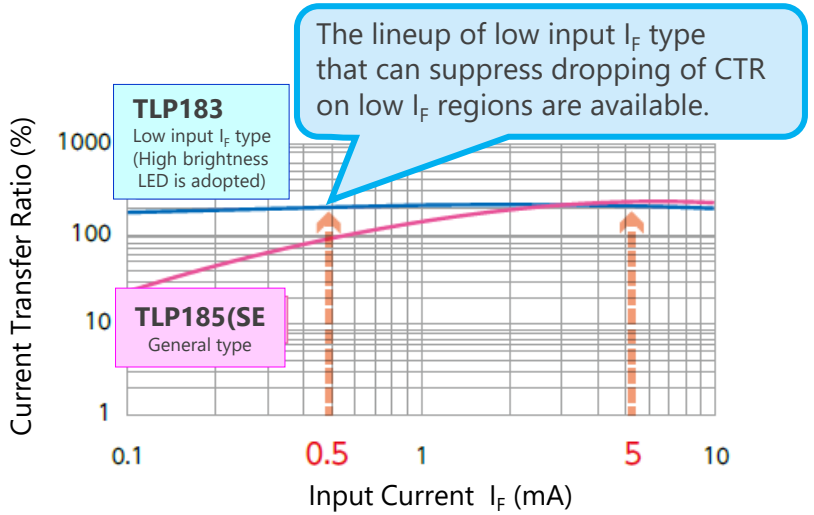

(Note: Toshiba internal comparison)

2 Wide operating temperature range

It is designed to operate even under severe ambient temperature conditions.

Lineup

Part number	TLP183	TLP185(SE
Package	4pin SO6 	4pin SO6 
BV_S [Vrms]	3750	3750
T_{opr} [°C]	-55 to 125	-55 to 110

◆Return to Block Diagram TOP

5 U-MOS Series MOSFET

SSM3K56MFV / SSM6N56FE

High breakdown voltage | High efficiency • Low loss | Small size packages

Value provided

U-MOS series MOSFET contributes to energy saving and miniaturization by improving the trade-off characteristics between on-resistance and capacitance.

1 Low on-resistance

By keeping the drain-source on-resistance low, heat generation and power consumption can be reduced and contributes to miniaturization.

2 Small gate input charge

Switching characteristics are improved by reducing the amount of gate input charge.

3 Fast switching speed

Reducing switching loss by high speed operation contributes to higher efficiency.

Trade-off characteristics of on-resistance and gate input charge

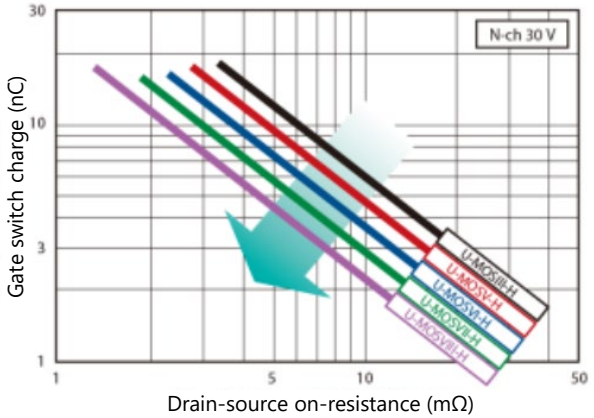

(Note: Toshiba internal comparison)

Lineup

Part number		SSM3K56MFV	SSM6N56FE
Package		VESM 	ES6 
V_{DSS} [V]		20	20
I_D [A]		0.8	0.8
$R_{DS(ON)}$ [Ω] @V_{GS} = 4.5 V	Typ.	0.186	0.186
	Max	0.235	0.235
Polarity		N-ch	N-ch x 2

◆Return to Block Diagram TOP

6 Rectifier diode
CMG06A

High breakdown voltage | High efficiency • Low loss | Small size packages

Value provided

Wide range of products are provided, mainly small surface mount package that is suitable for high density assembly.

1 Small surface mount package

Adopting M-FLAT™ package which is lower in height compared to the Toshiba's conventional lead type contributes to the space saving of the equipment.

2 Wide product lineup

Repetitive peak reverse voltage: 200 to 1000 V
Average forward current: 0.5 to 3 A
Suitable product can be selected according to requirements.

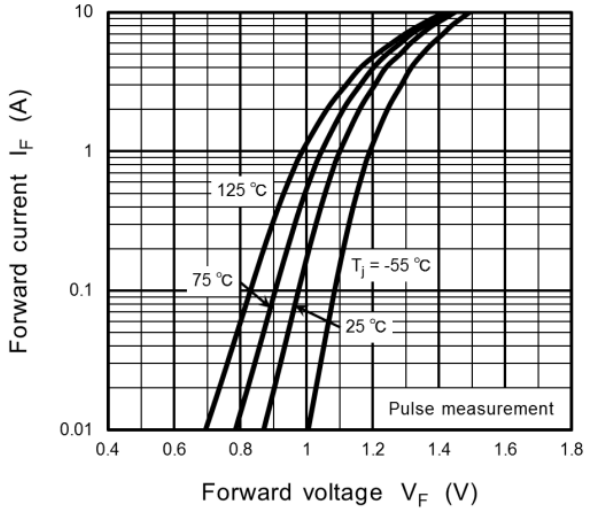

CMG06A
forward characteristic

Lineup

Part number	CMG06A
Package	M-FLAT™ 
$I_{F(AV)}$ [A]	1
V_{RRM} [V]	600

◆Return to Block Diagram TOP

7 Triac output photocoupler

TLP267J / TLP3052A

High breakdown voltage | High efficiency · Low loss | Small size packages

Value provided

This photocoupler consists of a non zero crossing photo triac, optically coupled to an infrared light emitting diode.

1 Non zero cross type

This photocoupler is suitable for the case where the operation time is short and phase control is necessary.

2 Switching characteristic

It has excellent features such as high speed, low noise and silence.

3 Miniaturization of mounting area

4pin SO6 packages have a size of 3.7 x 7.0 x 2.1 mm. (TLP267J)

TLP267J
Internal connection

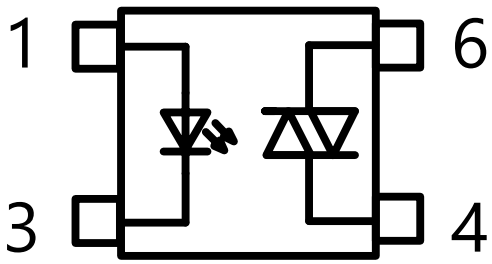

UL-approved: UL1577, File No. E67349
cUL-approved: CSA Component Acceptance Service No.5A File No.E67349
VDE-approved: EN60747-5-5, EN62368-1 (Note)
(Note) When a VDE approved type is needed, please designate the Option (V4).

Lineup

Part number	TLP267J	TLP3052A
Package	4pin SO6 	5pin DIP6 
V_{DRM} [V]	600	600
BV_S [Vrms]	3750	5000
T_{opr} [°C]	-40 to 100	-40 to 100
Type	Non zero voltage	

◆Return to Block Diagram TOP

8 Main control MCU

TLCS™-870/C1 Series TMP89FW24ADFG / TMP89FW24AFG / TMP89FW20AUG

High breakdown voltage | High efficiency · Low loss | Small size packages

Value provided

8-bit microcontroller with wide range voltage operation [Note 1] is equipped with a large capacity 124 KB flash memory and LCD driver.

1 TLCS™-870/C1 CPU

Toshiba original 8-bit CPU core and 16-bit general purpose registers can be used to execute 16-bit arithmetic and transfer instructions. Due to the configuration of another address space to code and data, the maximum address space of 124 KB is realized.

2 PPG [Note 2] output for IGBT control / System cost reduction

The built-in 10-bit timer suitable for IGBT control, can be controlled quasi-class-E and half-bridge inverter (with emergency-stop function). The built-in LCD driver and control circuit enable direct drive of the liquid crystal display.

3 Low voltage / Low power consumption operation / Small package

Operating with backup battery is available because minimum operating voltage is 1.8 V. Power consumption can be reduced by executing the program on shadow RAM. The packages variations are QFP80, small LQFP80 and LQFP64.

[Note 2] PPG (Programmable Phase Generator)

TMP89FW24ADFG

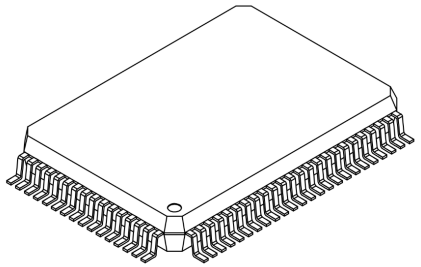

QFP80-P-1420-0.80M

TMP89FW24AFG

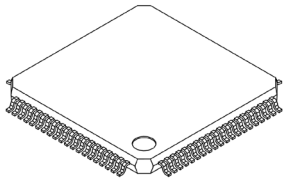

LQFP80-P-1212-0.50F

TMP89FW20AUG

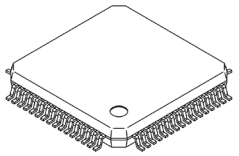

LQFP64-P-1010-0.50E

Lineup

Part number	TMP89FW24ADFG / AFG	TMP89FW20AUG
Max operating frequency [Note 1]	16 MHz @V_{DD} = 2.7 to 5.5 V / 8 MHz @V_{DD} = 1.8 to 2.7 V	
ROM (Flash memory)	Code area: 64 KB / Data area: 60 KB	
RAM	3 KB + Shadow RAM 3 KB	
IO port	68	52
Timer/Counter	16bit x 2ch, 10bit x 1ch, 8bit x 4ch	
Serial port	UART: 3ch, SIO: 1ch, I^2C/SIO: 1ch	
AD converter	8ch (10bit)	
LCD driver	40 seg. x 4 com.	32 seg. x 4 com.
Package	QFP80-P-1420-0.80M / LQFP80-P-1212-0.50F	LQFP64-P-1010-0.50E

[Note 1] Flash memory is read only when V_{DD} = 1.8 to 2.7 V.

◆Return to Block Diagram TOP

If you are interested in these products and have questions or comments about any of them, please do not hesitate to contact us below:

Contact address: https://toshiba.semicon-storage.com/ap-en/contact.html

Terms of use

This terms of use is made between Toshiba Electronic Devices and Storage Corporation (“We”) and Customer who downloads or uses this Reference Design. Customer shall comply with this terms of use. This Reference Design means all documents and data in order to design electronics applications on which our semiconductor device is embedded.

Section 1. Restrictions on usage
1. This Reference Design is provided solely as reference data for designing electronics applications. Customer shall not use this Reference Design for any other purpose, including without limitation, verification of reliability.
2. Customer shall not use this Reference Design for sale, lease or other transfer.
3. Customer shall not use this Reference Design for evaluation in high or low temperature, high humidity, or high electromagnetic environments.
4. This Reference Design shall not be used for or incorporated into any product or system whose manufacture, use, or sale is prohibited under any applicable laws or regulations.

Section 2. Limitations
1. We reserve the right to make changes to this Reference Design without notice.
2. This Reference Design should be treated as a reference only. WE ARE NOT RESPONSIBLE FOR ANY INCORRECT OR INCOMPLETE DATA AND INFORMATION.
3. Semiconductor devices can malfunction or fail. When designing electronics applications by referring to this Reference Design, Customer is responsible for complying with safety standards and for providing adequate designs and safeguards for their hardware, software and systems which minimize risk and avoid situations in which a malfunction or failure of semiconductor devices could cause loss of human life, bodily injury or damage to property, including data loss or corruption. Customer must also refer to and comply with the latest versions of all relevant our information, including without limitation, specifications, data sheets and application notes for semiconductor devices, as well as the precautions and conditions set forth in the "Semiconductor Reliability Handbook".
4. Designing electronics applications by referring to this Reference Design, Customer must evaluate the whole system sufficiently. Customer is solely responsible for applying this Reference Design to Customer's own product design or applications. WE ASSUME NO LIABILITY FOR CUSTOMER'S PRODUCT DESIGN OR APPLICATIONS.
5. WE SHALL NOT BE RESPONSIBLE FOR ANY INFRINGEMENT OF PATENTS OR ANY OTHER INTELLECTUAL PROPERTY RIGHTS OF THIRD PARTIES THAT MAY RESULT FROM THE USE OF THIS REFERENCE DESIGN. NO LICENSE TO ANY INTELLECTUAL PROPERTY RIGHT IS GRANTED BY THIS TERMS OF USE, WHETHER EXPRESS OR IMPLIED, BY ESTOPPEL OR OTHERWISE.
6. THIS REFERENCE DESIGN IS PROVIDED "AS IS". WE (a) ASSUME NO LIABILITY WHATSOEVER, INCLUDING WITHOUT LIMITATION, INDIRECT, CONSEQUENTIAL, SPECIAL, OR INCIDENTAL DAMAGES OR LOSS, INCLUDING WITHOUT LIMITATION, LOSS OF PROFITS, LOSS OF OPPORTUNITIES, BUSINESS INTERRUPTION AND LOSS OF DATA, AND (b) DISCLAIM ANY AND ALL EXPRESS OR IMPLIED WARRANTIES AND CONDITIONS RELATED TO THIS REFERENCE DESIGN, INCLUDING WITHOUT LIMITATION, WARRANTIES OR CONDITIONS OF FUNCTION AND WORKING, WARRANTIES OF MERCHANTABILITY, FITNESS FOR A PARTICULAR PURPOSE, ACCURACY OF INFORMATION, OR NONINFRINGEMENT.

Section 3. Terms and Termination
It is assumed that Customer agrees to any and all this terms of use if Customer downloads or uses this Reference Design. We may, at its sole and exclusive discretion, change, alter, modify, add, and/or remove any part of this terms of use at any time without any prior notice. We may terminate this terms of use at any time and without any cause. Upon termination of this terms of use, Customer shall eliminate this Reference Design. Furthermore, upon our request, Customer shall submit to us a written confirmation to prove elimination of this Reference Design.

Section 4. Export Control
Customer shall not use or otherwise make available this Reference Design for any military purposes, including without limitation, for the design, development, use, stockpiling or manufacturing of nuclear, chemical, or biological weapons or missile technology products (mass destruction weapons). This Reference Design may be controlled under the applicable export laws and regulations including, without limitation, the Japanese Foreign Exchange and Foreign Trade Act and the U.S. Export Administration Regulations. Export and re-export of this Reference Design is strictly prohibited except in compliance with all applicable export laws and regulations.

Section 5. Governing Laws
This terms of use shall be governed and construed by laws of Japan, without reference to conflict of law principle.

Section 6. Jurisdiction
Unless otherwise specified, Tokyo District Court in Tokyo, Japan shall be exclusively the court of first jurisdiction for all disputes under this terms of use.

RESTRICTIONS ON PRODUCT USE

- Toshiba Electronic Devices & Storage Corporation, and its subsidiaries and affiliates (collectively "TOSHIBA"), reserve the right to make changes to the information in this document, and related hardware, software and systems (collectively "Product") without notice.
- This document and any information herein may not be reproduced without prior written permission from TOSHIBA. Even with TOSHIBA's written permission, reproduction is permissible only if reproduction is without alteration/omission.
- Though TOSHIBA works continually to improve Product's quality and reliability, Product can malfunction or fail. Customers are responsible for complying with safety standards and for providing adequate designs and safeguards for their hardware, software and systems which minimize risk and avoid situations in which a malfunction or failure of Product could cause loss of human life, bodily injury or damage to property, including data loss or corruption. Before customers use the Product, create designs including the Product, or incorporate the Product into their own applications, customers must also refer to and comply with (a) the latest versions of all relevant TOSHIBA information, including without limitation, this document, the specifications, the data sheets and application notes for Product and the precautions and conditions set forth in the "TOSHIBA Semiconductor Reliability Handbook" and (b) the instructions for the application with which the Product will be used with or for. Customers are solely responsible for all aspects of their own product design or applications, including but not limited to (a) determining the appropriateness of the use of this Product in such design or applications; (b) evaluating and determining the applicability of any information contained in this document, or in charts, diagrams, programs, algorithms, sample application circuits, or any other referenced documents; and (c) validating all operating parameters for such designs and applications. **TOSHIBA ASSUMES NO LIABILITY FOR CUSTOMERS' PRODUCT DESIGN OR APPLICATIONS.**
- **PRODUCT IS NEITHER INTENDED NOR WARRANTED FOR USE IN EQUIPMENTS OR SYSTEMS THAT REQUIRE EXTRAORDINARILY HIGH LEVELS OF QUALITY AND/OR RELIABILITY, AND/OR A MALFUNCTION OR FAILURE OF WHICH MAY CAUSE LOSS OF HUMAN LIFE, BODILY INJURY, SERIOUS PROPERTY DAMAGE AND/OR SERIOUS PUBLIC IMPACT ("UNINTENDED USE").** Except for specific applications as expressly stated in this document, Unintended Use includes, without limitation, equipment used in nuclear facilities, equipment used in the aerospace industry, lifesaving and/or life supporting medical equipment, equipment used for automobiles, trains, ships and other transportation, traffic signaling equipment, equipment used to control combustions or explosions, safety devices, elevators and escalators, and devices related to power plant. **IF YOU USE PRODUCT FOR UNINTENDED USE, TOSHIBA ASSUMES NO LIABILITY FOR PRODUCT.** For details, please contact your TOSHIBA sales representative or contact us via our website.
- Do not disassemble, analyze, reverse-engineer, alter, modify, translate or copy Product, whether in whole or in part.
- Product shall not be used for or incorporated into any products or systems whose manufacture, use, or sale is prohibited under any applicable laws or regulations.
- The information contained herein is presented only as guidance for Product use. No responsibility is assumed by TOSHIBA for any infringement of patents or any other intellectual property rights of third parties that may result from the use of Product. No license to any intellectual property right is granted by this document, whether express or implied, by estoppel or otherwise.
- **ABSENT A WRITTEN SIGNED AGREEMENT, EXCEPT AS PROVIDED IN THE RELEVANT TERMS AND CONDITIONS OF SALE FOR PRODUCT, AND TO THE MAXIMUM EXTENT ALLOWABLE BY LAW, TOSHIBA (1) ASSUMES NO LIABILITY WHATSOEVER, INCLUDING WITHOUT LIMITATION, INDIRECT, CONSEQUENTIAL, SPECIAL, OR INCIDENTAL DAMAGES OR LOSS, INCLUDING WITHOUT LIMITATION, LOSS OF PROFITS, LOSS OF OPPORTUNITIES, BUSINESS INTERRUPTION AND LOSS OF DATA, AND (2) DISCLAIMS ANY AND ALL EXPRESS OR IMPLIED WARRANTIES AND CONDITIONS RELATED TO SALE, USE OF PRODUCT, OR INFORMATION, INCLUDING WARRANTIES OR CONDITIONS OF MERCHANTABILITY, FITNESS FOR A PARTICULAR PURPOSE, ACCURACY OF INFORMATION, OR NONINFRINGEMENT.**
- Product may include products using GaAs (Gallium Arsenide). GaAs is harmful to humans if consumed or absorbed, whether in the form of dust or vapor. Handle with care and do not break, cut, crush, grind, dissolve chemically or otherwise expose GaAs in Product.
- Do not use or otherwise make available Product or related software or technology for any military purposes, including without limitation, for the design, development, use, stockpiling or manufacturing of nuclear, chemical, or biological weapons or missile technology products (mass destruction weapons). Product and related software and technology may be controlled under the applicable export laws and regulations including, without limitation, the Japanese Foreign Exchange and Foreign Trade Law and the U.S. Export Administration Regulations. Export and re-export of Product or related software or technology are strictly prohibited except in compliance with all applicable export laws and regulations.
- Please contact your TOSHIBA sales representative for details as to environmental matters such as the RoHS compatibility of Product. Please use Product in compliance with all applicable laws and regulations that regulate the inclusion or use of controlled substances, including without limitation, the EU RoHS Directive. **TOSHIBA ASSUMES NO LIABILITY FOR DAMAGES OR LOSSES OCCURRING AS A RESULT OF NONCOMPLIANCE WITH APPLICABLE LAWS AND REGULATIONS.**

TOSHIBA