TOSHIBA

R21.1

Washing Machine

Solution Proposal by Toshiba

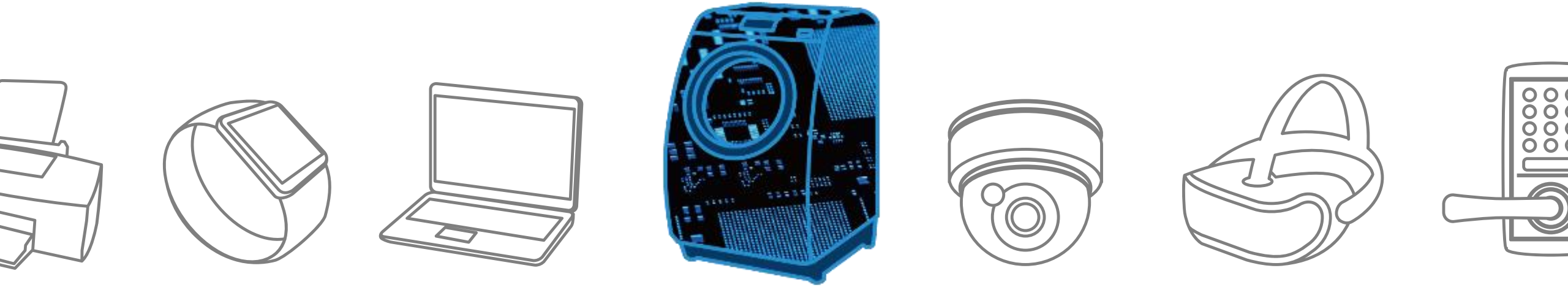

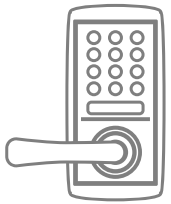

Toshiba Electronic Devices & Storage Corporation provides comprehensive device solutions to customers developing new products by applying its thorough understanding of the systems acquired through the analysis of basic product designs.

Block Diagram

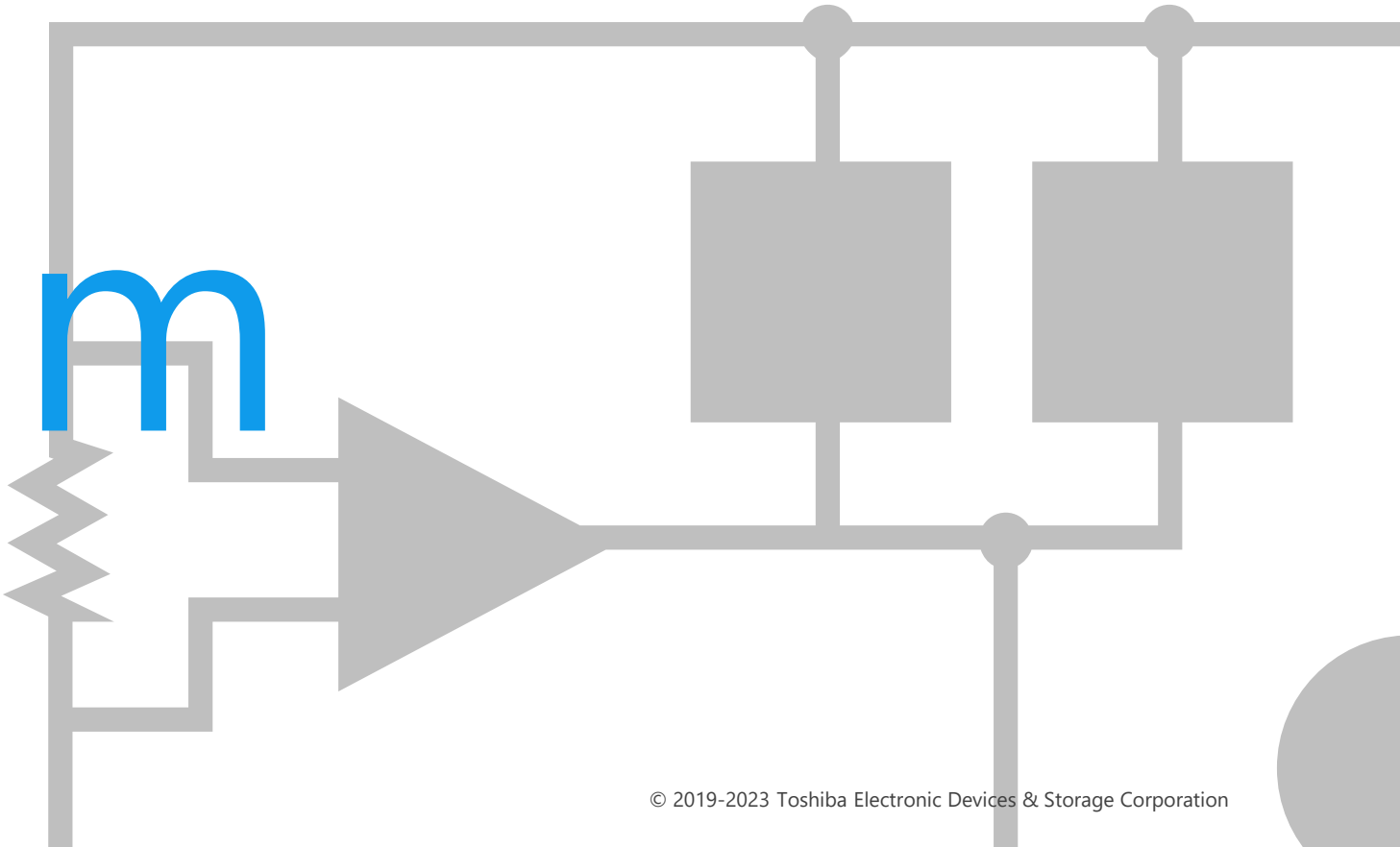

Washing Machine　Overall block diagram

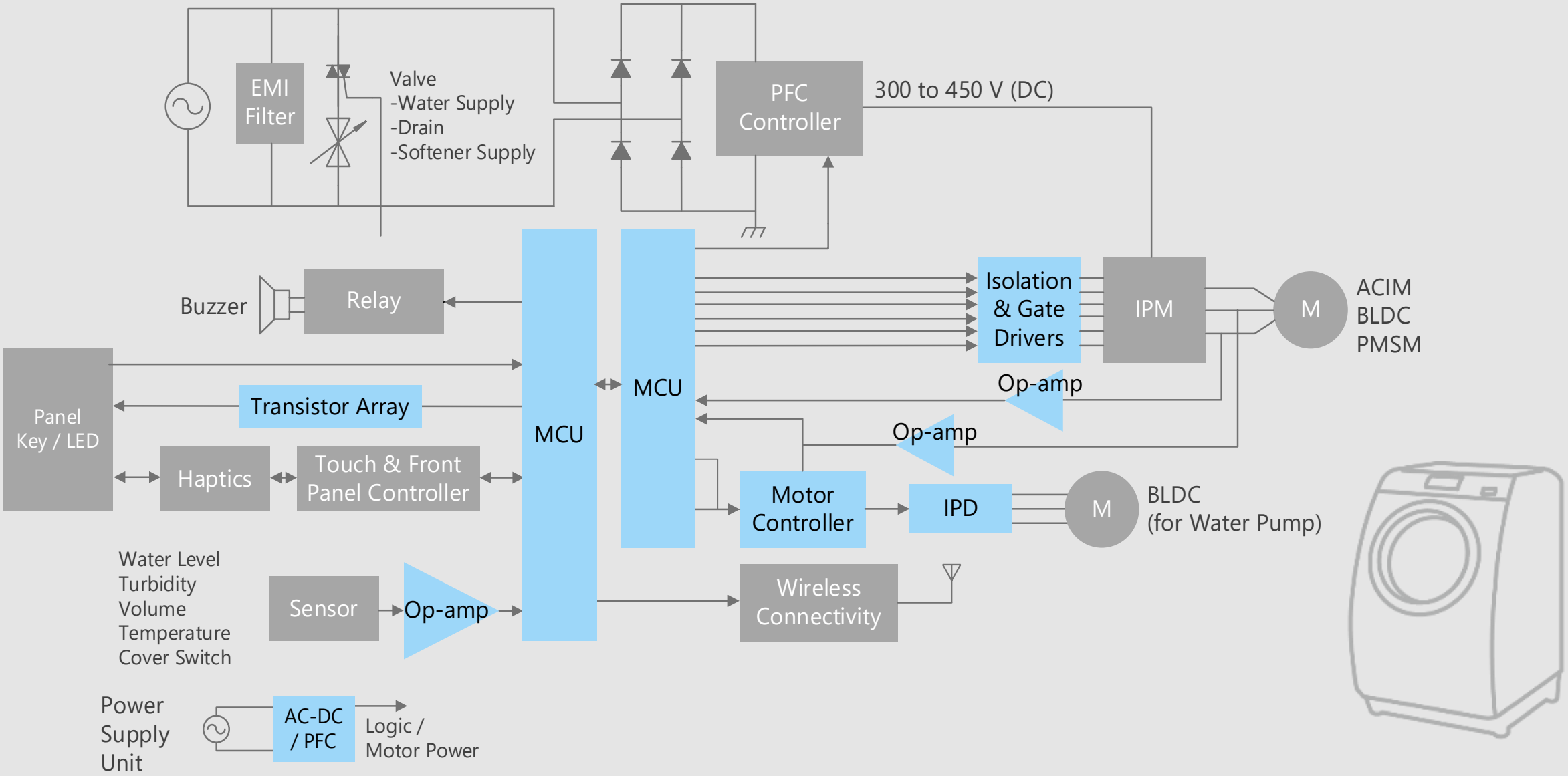

Washing Machine　Detail of AC-DC converter unit

AC-DC converter circuit

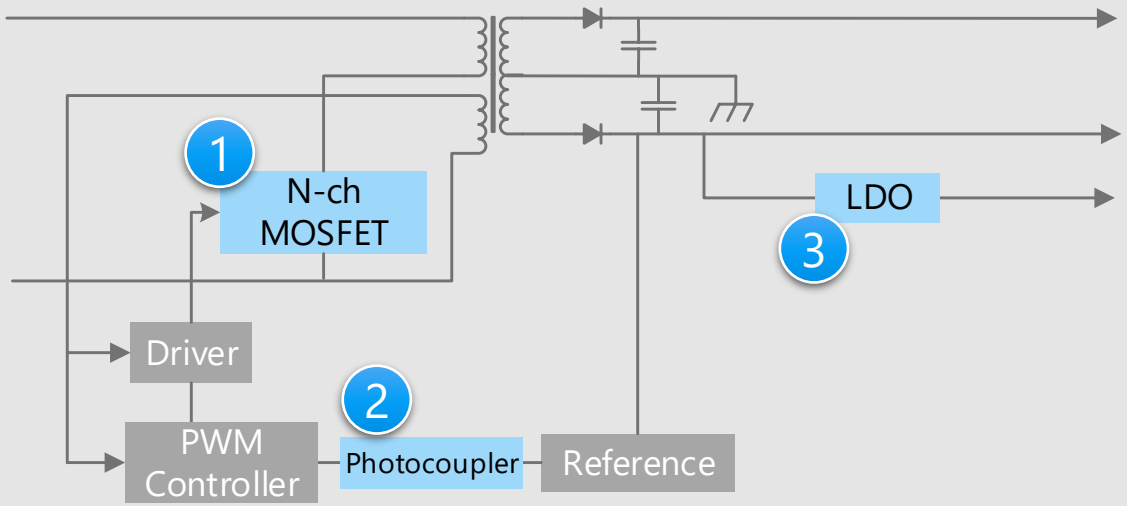

* Click the number in the circuit diagram to jump to the detailed description page.

Criteria for device selection

- High voltage MOSFETs are suitable for switching on primary side of AC-DC converter.
- Photocoupler with high current transfer ratio even in the low input current range contributes to higher power supply efficiency.
- LDO regulators are suitable for power supply circuits with low ripple noise and stable voltage.

Proposals from Toshiba

- **Suitable for high efficiency power supply**
  DTMOSⅣ Series MOSFET　1
- **High current transfer ratio and high temperature operation makes easy to design**
  Transistor output photocoupler　2
- **Supply the power with low noise**
  Small surface mount LDO regulator　3

Washing Machine　Detail of PFC unit

PFC circuit

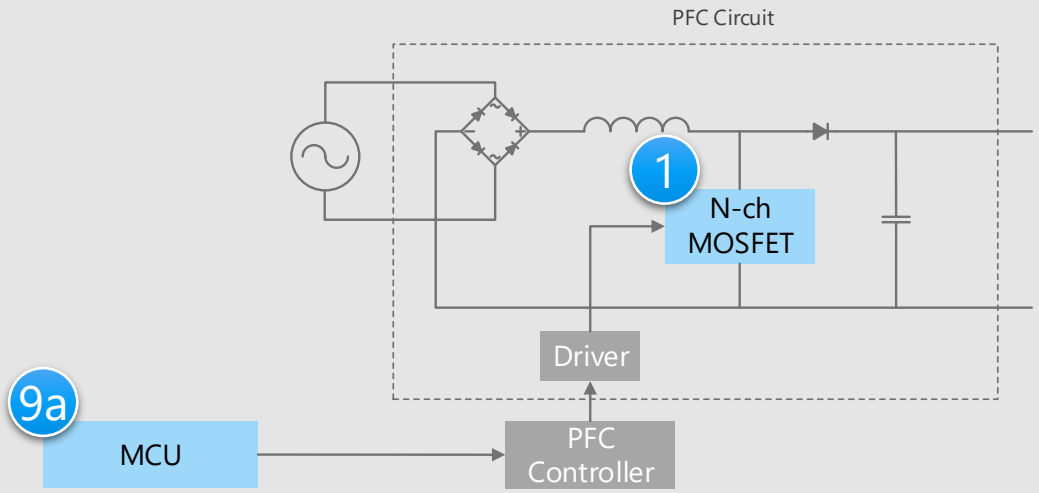

Criteria for device selection

- MOSFETs with high speed switching and low on-resistance are suitable for PFC circuit.
- MCU can be used for PFC control.

Proposals from Toshiba

- **Suitable for high efficiency power supply**
  DTMOSⅣ Series MOSFET　1
- **Suitable for PFC and motor control**
  MCU M4K Group / M470 Group / M370 Group　9a

* Click the number in the circuit diagram to jump to the detailed description page.

Washing Machine　Detail of motor drive unit

Main motor drive unit

MCU (controller) + gate driver + IPM

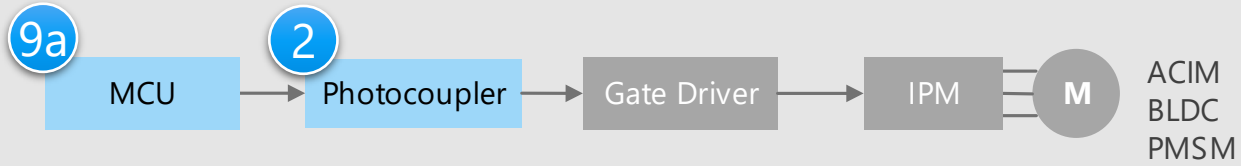

MCU (controller) + gate driver + MOSFET

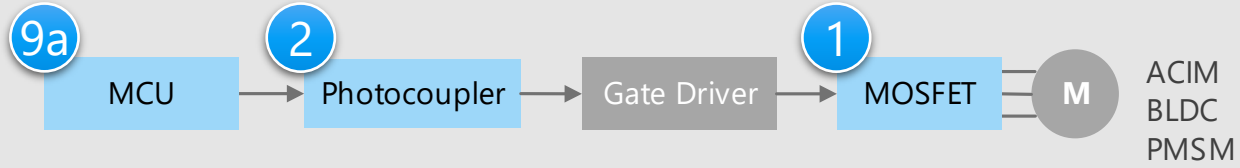

Water pump drive unit

MCD (controller) + high voltage IPD

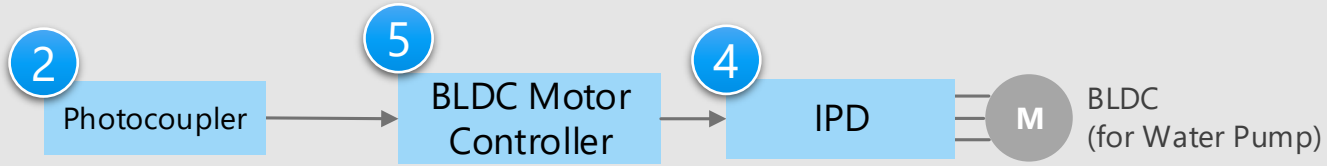

* Click the number in the circuit diagram to jump to the detailed description page.

Criteria for device selection

- IPDs are suitable for water pump brushless DC motor drive.
- MOSFET with short reverse recovery time is suitable for driving the motor.
- Transistor output photocouplers are suitable for signal isolation in the motor control section.
- By using brushless DC motor controllers, three-phase brushless DC motors can be controlled easily.

Proposals from Toshiba

- **Suitable for high efficiency power supply**
  DTMOSⅣ Series MOSFET　1
- **High current transfer ratio and high temperature operation makes easy to design**
  Transistor output photocoupler　2
- **High voltage motor driver circuit**
  High voltage IPD　4
- **Easy motor drive**
  Three-phase brushless DC motor controller　5
- **Suitable for PFC and motor control**
  MCU M4K Group / M470 Group / M370 Group　9a

Washing Machine　Details of communication unit / sensor input unit

Communication unit

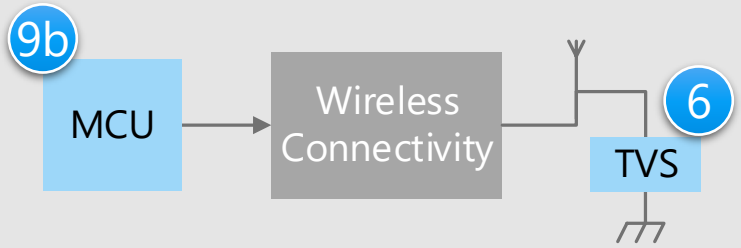

Sensor input unit

Sensor Input
Water Level
Turbidity
Volume
Temperature
Cover Switch

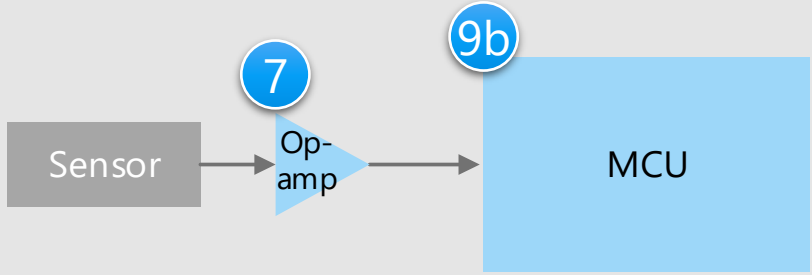

* Click the number in the circuit diagram to jump to the detailed description page.

Criteria for device selection

- Lower capacity type TVS diodes are suitable for ESD protection from antennas because they have a small effect on RF signal transmission.
- The operational amplifier should be low current consumption or low noise device.

Proposals from Toshiba

- **Absorb static electricity (ESD) to prevent malfunction of the circuit**
  TVS diode　6
- **Amplification of detected very small signals**
  Low current consumption op-amp / Low noise op-amp　7
- **Easy software development using general purpose CPU cores**
  MCU M3H Group　9b

Washing Machine　Detail of operation unit

Operation unit (Key/LED)

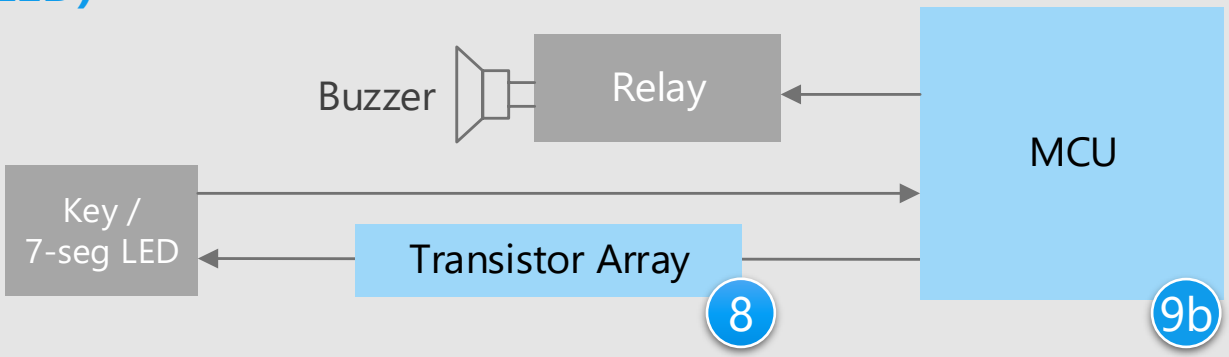

Operation unit (Touch panel)

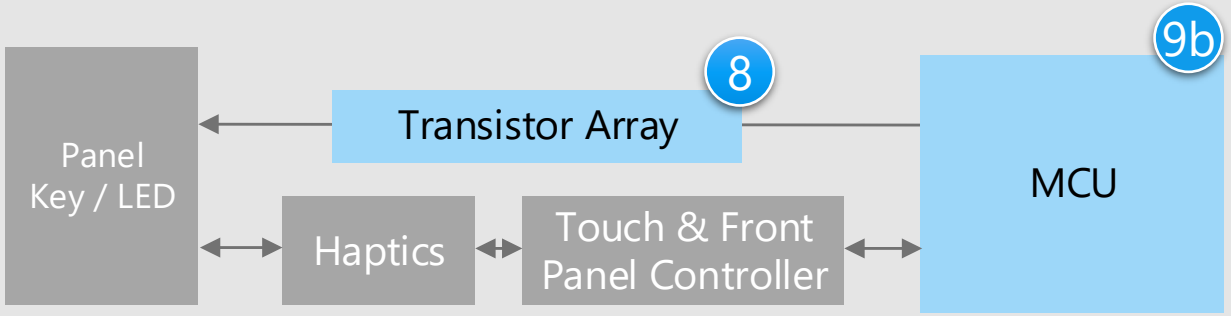

* Click the number in the circuit diagram to jump to the detailed description page.

Criteria for device selection

- Transistor array with low loss is suitable for driving LED or touch panel in operation unit.

Proposals from Toshiba

- **High current and high efficiency driver with DMOS FET**
  Transistor array 8
- **Easy software development using general purpose CPU cores**
  MCU M3H Group 9b

Recommended Devices

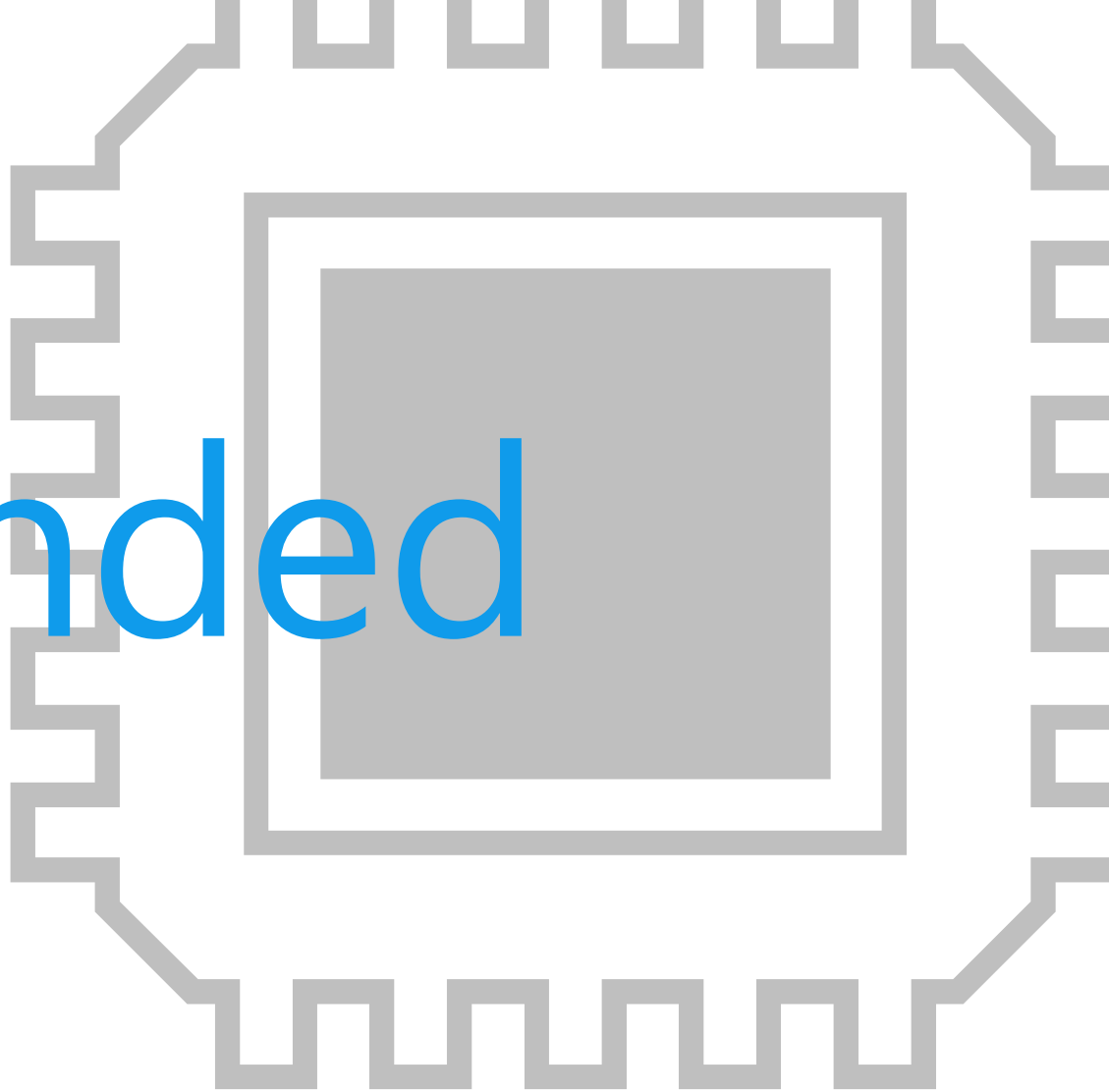

Device solutions to address customer needs

As described above, in order to design Washing Machine, **“Quieter and more efficient motors”**, **“Lower power consumption of set”** and **“Miniaturization of circuit boards”** are important factors. Toshiba’s proposals are based on these three solution perspectives.

Quieter and more efficient motors	Lower power consumption of set	Miniaturization of circuit boards
Brushless DC motor driving	**High efficiency · Low loss**	**Small size Packages**

Device solutions to address customer needs

	Brushless DC motor driving	High efficiency · Low loss	Small size packages
1 DTMOSⅣ Series MOSFET	●	●	●
2 Transistor output photocoupler		●	●
3 Small surface mount LDO regulator		●	●
4 High voltage IPD	●	●	●
5 Three-phase brushless DC motor controller	●	●	●
6 TVS diode			●
7 Low current consumption op-amp / Low noise op-amp		●	●
8 Transistor array		●	●
9a MCU M4K Group / M470 Group / M370 Group	●	●	●
9b MCU M3H Group		●	●

1 DTMOSⅣ Series MOSFET

TK31N60W / TK28A65W / TK20A60W5

Brushless DC motor driving | High efficiency · Low loss | Small size packages

Value provided

30 % reduction in the figure of merit RonA (compared with Toshiba conventional products), improving power supply efficiency and contributing to miniaturization.

1 30 % reduction of RonA

Adoption of newly developed single-epitaxial process to reduce the figure of merit RonA by 30 %.
(Compared with Toshiba DTMOSⅢ products)

2 Reduction of on-resistance rise at high temperature

Single epitaxial process reduces the on-resistance rise at high temperature.

3 Optimization of switching speed

Optimization of switching speed has been achieved by reduction of C_{OSS} (by 12 %, compared with Toshiba conventional products) and other factors.

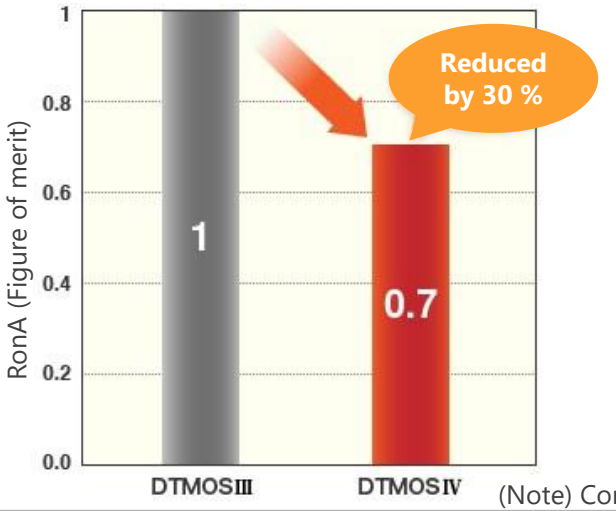

(Note) Compared with Toshiba conventional products

Lineup

Part number		TK31N60W	TK28A65W	TK20A60W5
Package		TO-247	TO-220SIS	TO-220SIS
V_{DSS} [V]		600	650	600
I_D [A]		30.8	27.6	20
$R_{DS(ON)}$ [Ω] @V_{GS} = 10 V	Typ.	0.073	0.094	0.15
	Max	0.088	0.11	0.175
Polarity		N-ch	N-ch	N-ch

◆Return to Block Diagram TOP

2 Transistor output photocoupler

TLP383 / TLP293 / TLP385

Brushless DC motor driving | High efficiency · Low loss | Small size packages

Value provided

High CTR (Current Transfer Ratio) is realized even in low input current range (I_F = 0.5 mA).

1 High current transfer ratio

The TLP383 and TLP293 are high-isolation photocouplers that optically couple a phototransistor and high output infrared LED. Compared to Toshiba's conventional products (TLP385), higher CTR (Current Transfer Ratio) in low input current range (@I_F = 0.5 mA) is realized.

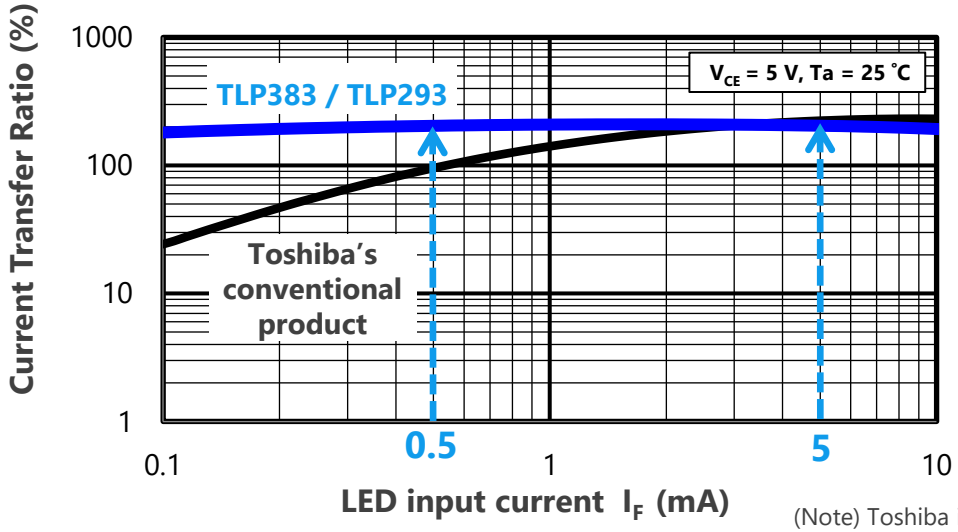

(Note) Toshiba internal comparison

2 Designed for high temperature operation

The TLP383 and TLP293 are designed to operate even under severe ambient temperature conditions.

Lineup

Part number	TLP383	TLP293	TLP385
Package	4pin SO6L 	SO4 	4pin SO6L 
BV_S [Vrms]	5000	3750	5000
T_{opr} [°C]	-55 to 125	-55 to 125	-55 to 110

◆Return to Block Diagram TOP

3 Small surface mount LDO regulator

TCR15AG / TCR13AG / TCR8BM / TCR5BM / TCR5RG / TCR3RM / TCR3U / TCR2L / TAR5 Series

Brushless DC motor driving | High efficiency · Low loss | Small size packages

Value provided

Wide lineup from general purpose type to small package type are provided.
Contribute to realize a stable power supply not affected by fluctuation of battery.

1 Low dropout voltage

The originally developed latest process significantly improved the dropout voltage characteristics.

2 High PSRR Low output noise voltage

Many product series that realize both high PSRR (Power Supply Rejection Ratio) and low output noise voltage characteristics are provided. They are suitable for stable power supply for analog circuit.

3 Low current consumption

0.34 µA of $I_{B(ON)}$ is realized by utilizing CMOS process and unique circuit technology.
(TCR3U Series)

Low dropout voltage

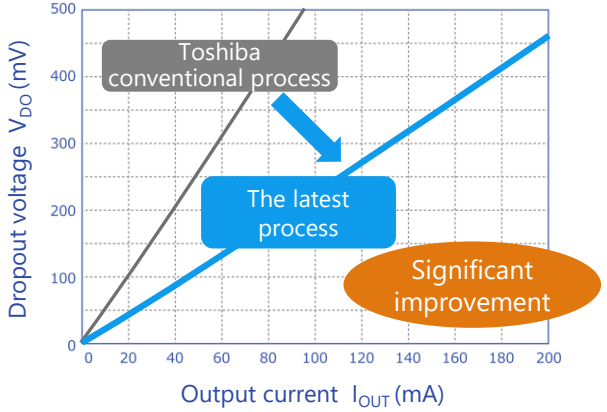

(Note) Toshiba internal comparison

Rich package lineup

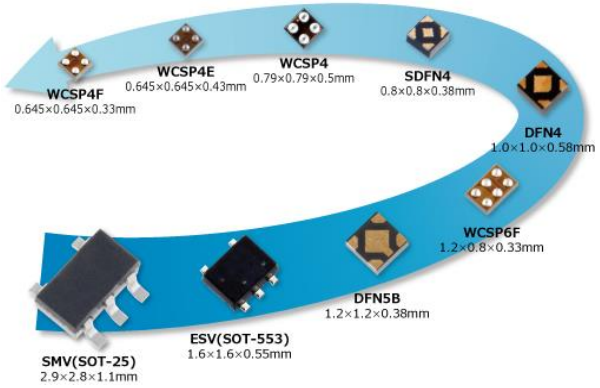

Lineup

Part number	TCR15AG Series	TCR13AG Series	TCR8BM Series	TCR5BM Series	TCR5RG Series	TCR3RM Series	TCR3U Series	TCR2L Series	TAR5 Series
Features	Low dropout voltage High PSRR				High PSRR Low noise Low current consumption		Low current consumption		15 V Input voltage Bipolar type
I_{OUT} (Max) [A]	1.5	1.3	0.8	0.5		0.3		0.2	
PSRR (Typ.) [dB] @f = 1 kHz	95	90	98	98	100	100	70	-	70
I_B (Typ.) [µA]	25	56	20	19	7	7	0.34	1	170

◆Return to Block Diagram TOP

4 High voltage IPD (180° conduction type)

TPD4204F

Brushless DC motor driving | High efficiency · Low loss | Small size packages

Value provided

A brushless DC motor driver with a built-in MOSFET can be driven at a variable speed by control signals from the MCU.

1 Built-in circuitry required to drive the motor

It contains a level shifting high side driver, low side driver and MOSFET.

2 Motor drive terminals and control terminals are separated

High voltage and large current terminals and the control terminals are separated on both sides of the package, thereby eliminating the complexity of wiring.

3 Included protection functions

Over current and under voltage protection, shutdown (SD) and thermal shutdown functions are available.

TPD4204F
Application Circuit Example

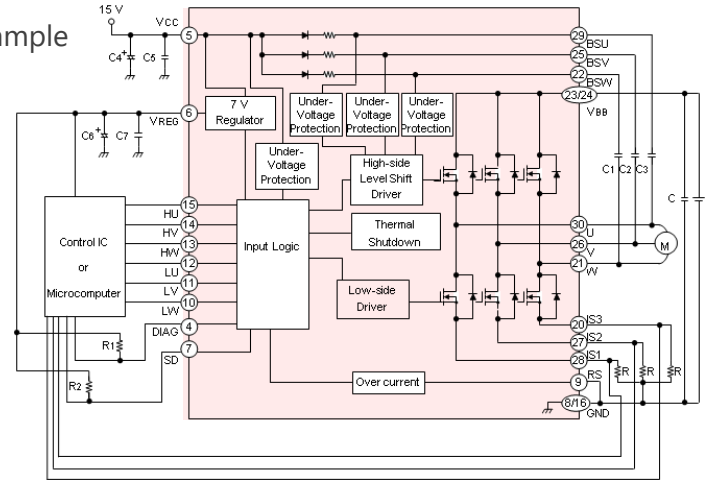

Lineup

Part number	TPD4204F
Package	P-SSOP30-1120-1.00-001 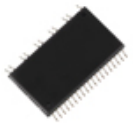
V_{BB} [V]	600
I_{out} [A]	2.5
V_{CC} [V]	13.5 to 16.5

◆Return to Block Diagram TOP

5 Three-phase brushless DC motor controller

TB6584FNG / TB6584AFNG / TB6634FNG

Brushless DC motor driving | High efficiency · Low loss | Small size packages

Value provided

High voltage and high current brushless DC motor driving can be implemented by external MOSFET.

1 High efficient motor control by automatic phase control

Automatic phase controller by current feedback is integrated adding conventional fixed phase voltage input (32 steps).

2 Motor control with low noise, and low vibration

Sine wave drive system with smooth current waveforms contributes to lower motor noise and vibration compared to conventional square wave drive system [Note].

3 Sufficient development support

Various supports such as third party evaluation board and PSpice® data for development and design are prepared.

[Note] Comparison with Toshiba products

TB6584FNG, TB6584AFNG
TB6634FNG

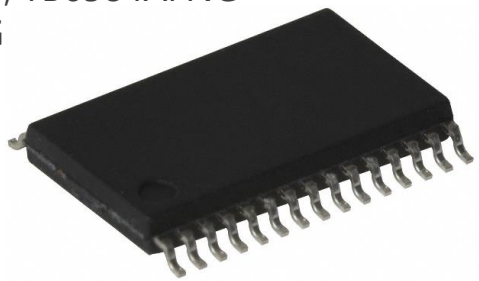

SSOP30-P-300-0.65 Package (10.2 x 7.6 x 1.6 mm)

Lineup

Part number	TB6584FNG	TB6584AFNG	TB6634FNG
Power supply voltage	6 to 16.5 V (operating range)		
Output current	0.002 A (for driving MOSFET) (operating range)		
Drive system	Sine wave drive system		
Features	Phase control: Automatic (current feedback) Hall device / Hall IC compatible Internal regulator: 5 V / 30 mA (Max) Error detection: overcurrent protection, abnormal position signal protection, undervoltage lockout, motor restrained detection (TB6634FNG)		

◆Return to Block Diagram TOP

6 TVS diode

DF2B7ASL / DF2S6P1CT / DF2B5M4SL / DF2B6M4SL

Brushless DC motor driving | High efficiency · Low loss | Small size packages

Value provided

Absorbs static electricity (ESD) from external terminals, prevents circuit malfunction, and protects devices.

1 Improved ESD pulse absorption

Improved ESD absorption compared to our conventional products. (50 % reduction in operating resistance) For some products, both low operating resistance and low capacitance are realized and ensures high signal protection performance and signal quality.

2 Suppress ESD energy by low clamp voltage

Protect the connected circuits/devices using Toshiba own technology.

3 Suitable for high density mounting

A variety of small packages are available.

ESD Pulse Absorption Performance
(Toshiba internal comparison)

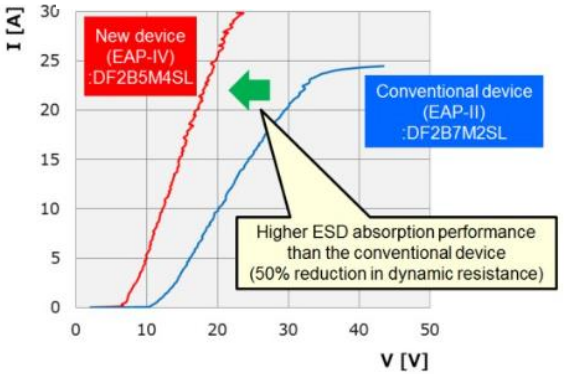

Unidirectional

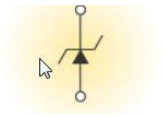

Suitable for paths such as logic signals. There is lineups of 1in1, 2in1, 4in1, 5in1, 7in1.

Bidirectional

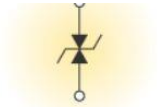

Suitable for paths with both polar signals such as audio signals

Lineup

Part number	DF2B7ASL	DF2S6P1CT	DF2B5M4SL	DF2B6M4SL
Package	SL2	CST2	SL2	SL2
V_{ESD} [kV]	±30	±30	±20	±20
V_{RWM} (Max) [V]	5.5	5.5	3.6	5.5
C_t (Typ.) [pF]	8.5	90	0.2	0.2
R_{DYN} (Typ.) [Ω]	0.2	0.23	0.5	0.5

(Note) This product is an ESD protection diode and cannot be used for purposes other than ESD protection.

◆Return to Block Diagram TOP

7 Low current consumption op-amp / Low noise op-amp

TC75S102F / TC75S67TU

Brushless DC motor driving | High efficiency · Low loss | Small size packages

Value provided

Low current consumption type and low noise type operational amplifiers maximize the performance of system.

1 Low voltage operation

We have a lineup of low power supply voltage-driven operational amplifiers using CMOS process for low power supply voltage-driven IoT equipment.

2 Low current consumption (TC75S102F) I_{DD} = 0.27 µA (Typ.)

CMOS processes have been used to achieve lower current consumption. This contributes to lower power consumption and longer life of IoT equipment.

3 Low noise (TC75S67TU) V_{NI} = 6.0 nV/√Hz (Typ.) @f = 1 kHz

This CMOS operational amplifier can amplify minute signals detected by various sensors [Note] with very low noises. By optimizing the process, the equivalent input noise voltage has been reduced.

[Note] Sensor types: vibration, shock, acceleration, pressure, infrared, temperature, etc.

TC75S102F
Current Consumption Characteristic
(Toshiba internal comparison)

TC75S67TU
Noise Characteristic
(Toshiba internal comparison)

Low current consumption product TC75S102F

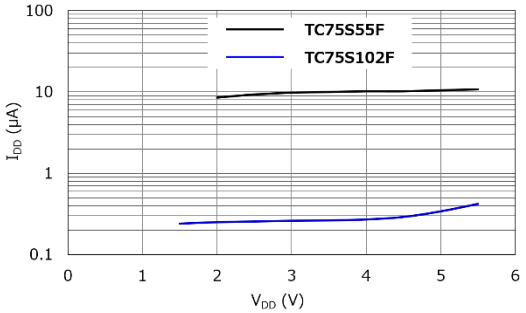

Reduce 1/f noise (10 Hz) by 86 % from our normal products

V_{NI} - f @Ta=25 ℃, V_{DD}=3.3 V

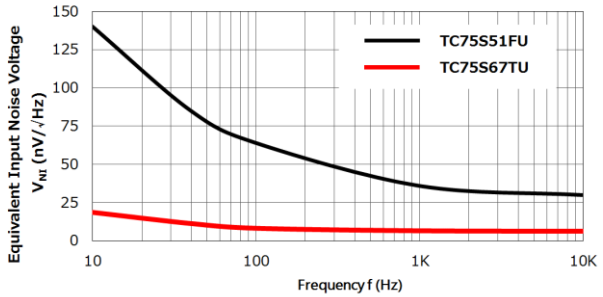

Lineup

Part number	TC75S102F	TC75S67TU
Package	SMV 	UFV 
V_{DD} - V_{SS} [V]	1.5 to 5.5	2.2 to 5.5
V_{IO} (Max) [mV]	1.3	3
CMV_{IN} (Max) [V]	V_{DD}	1.4 (@V_{DD} = 2.5 V)
I_{DD} (Typ. / Max) [µA]	0.27 / 0.46 (@V_{DD} = 1.5 V)	430 / 700 (@V_{DD} = 2.5 V)
V_{NI} (Typ.) [nV/√Hz] @f = 1 kHz	-	6

◆Return to Block Diagram TOP

8 Transistor array

TBD62003AFWG / TBD62083AFG / TBD62064AFG

Brushless DC motor driving | High efficiency · Low loss | Small size packages

Value provided

DMOS FET is used for the output of drive circuit and realizes low loss. And CMOS input can control directly from controller's I/O, etc.

1 Rich product lineup

In addition to the listed products, we have lineup of various packaged products (such as DIP, SOL, SOP, SSOP, etc.) and source output type products.

2 Built-in output clamp diode

Built-in output clamp diode regenerates the back electromotive force generated by switching of an inductive.

3 High current drive is possible.

The load can also be driven with higher current by connecting multiple outputs in parallel.

Equivalent circuit

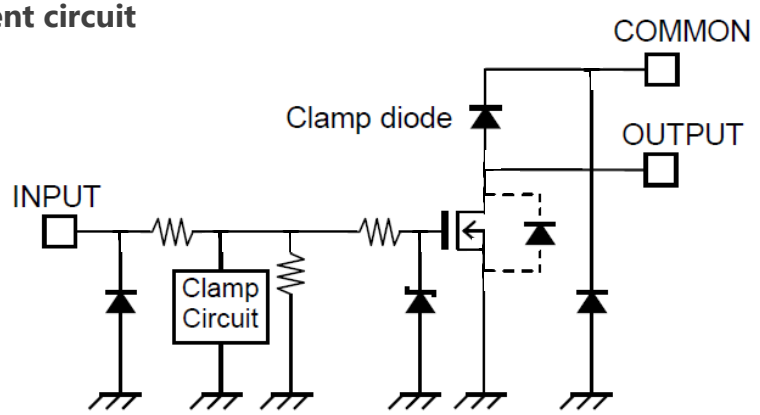

(Note) Equivalent circuit may be simplified for explanatory purpose.

Lineup

Part number	TBD62003AFWG	TBD62083AFG	TBD62064AFG
Package	P-SOP16-0410-1.27-002	SOP18-P-375-1.27	HSOP16-P-300-1.00
Output type	Sink	Sink	Sink
Number of channels	7ch	8ch	4ch
Input level	H	H	H
I_{OUT} [mA/ch]	500	500	1500
V_{OUT} [V]	50	50	50

◆Return to Block Diagram TOP

Value provided

System cost reduction, higher efficiency and less development work.

1 Equipped with motor control co-processor

Toshiba's original co-processor vector engine (VE) for motor control reduces CPU load and allows control of multiple motors and peripherals.

2 Equipped with motor control circuit

A variety of three-phase PWM [Note 1] waveforms and AD converters enable highly efficient, low noise control. The Advanced Encoder (A-ENC) reduces the load of CPU process in detecting the position performed for each PWM.

3 Provide development support tools

Third party evaluation boards and sample programs that can be used to shorten the development time are provided. Toshiba has begun offering a new, simple, versatile motor control software development kit (MCU Motor Studio). [Note 2]

[Note 1] Pulse Width Modulation

[Note 2] For M4K Group and will gradually expand for TXZ+™ Series products

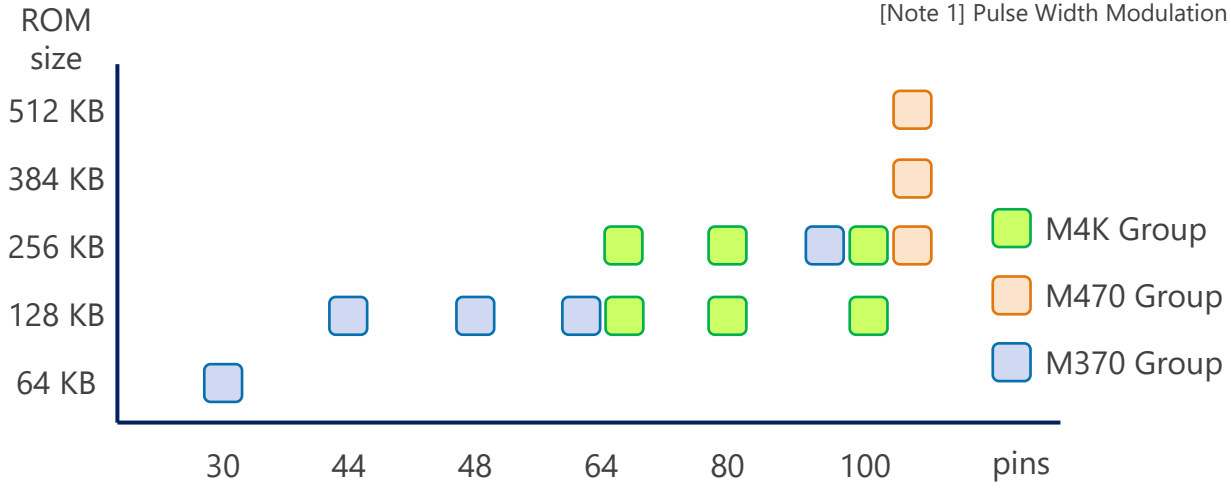

Lineup

Series	Group	Function
TXZ+™4A Series	M4K Group	Arm® Cortex®-M4, 160 MHz operation 4.5 to 5.5 V, 3motor control (Max), Data Flash
TX04 Series	M470 Group	Arm® Cortex®-M4, 120 MHz operation 4.5 to 5.5 V, 2motor control (Max)
TX03 Series	M370 Group	Arm® Cortex®-M3, 80 MHz operation 4.5 to 5.5 V, 2motor control (Max)

◆Return to Block Diagram TOP

Value provided

MCU is equipped with many peripheral functions. MCU contributes to higher functionality as a system control MCU.

1 Built-in Arm® Cortex®-M3 CPU core

MCU is equipped with Arm Cortex-M3 core. Maximum operation frequency is 120 MHz.

2 Various lineup of built-in memories and packages

M3H group integrates both 512 KB (Max) code and 32 KB data flash memories which support maximum 100,000 write cycle endurance, and has a wide lineup of package from 64 to 144 pins.

3 Equipped with many peripheral functions

M3H Group have many peripheral functions such as UART, SPI, I²C,12bit AD converter, 8bit DA converter, three-phase PWM output, ENC and digital LCD driver [Note], etc.

[Note] 64pins product isn't equipped with digital LCD driver.

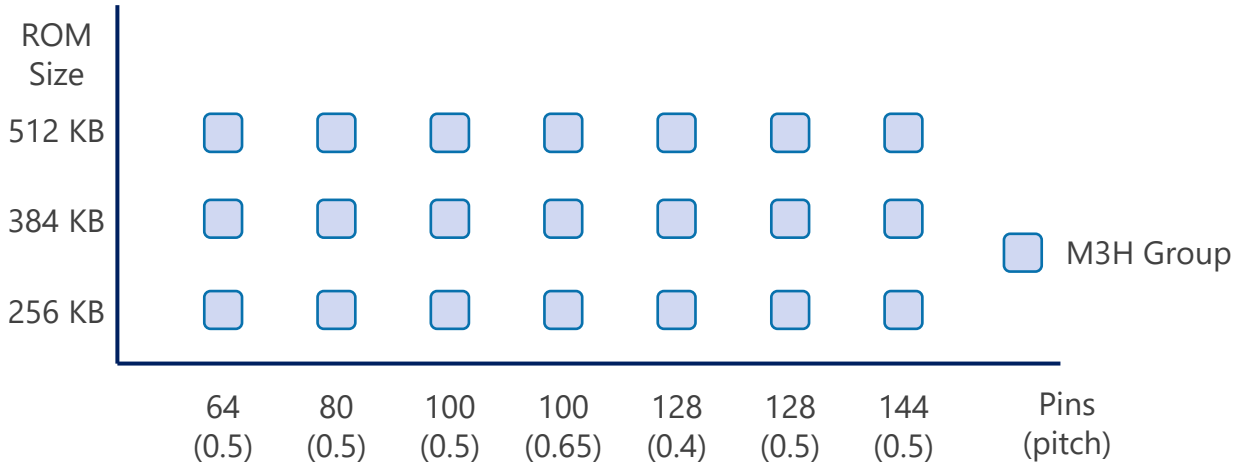

Lineup

Series	Group	Function
TXZ+™3A Series	M3H Group	Arm® Cortex®-M3, 120 MHz operation, 2.7 to 5.5 V

◆Return to Block Diagram TOP

If you are interested in these products and have questions or comments about any of them, please do not hesitate to contact us below:

Contact address: https://toshiba.semicon-storage.com/ap-en/contact.html

Terms of use

This terms of use is made between Toshiba Electronic Devices and Storage Corporation (“We”) and customers who use documents and data that are consulted to design electronics applications on which our semiconductor devices are mounted (“this Reference Design”). Customers shall comply with this terms of use. Please note that it is assumed that customers agree to any and all this terms of use if customers download this Reference Design. We may, at its sole and exclusive discretion, change, alter, modify, add, and/or remove any part of this terms of use at any time without any prior notice. We may terminate this terms of use at any time and for any reason. Upon termination of this terms of use, customers shall destroy this Reference Design. In the event of any breach thereof by customers, customers shall destroy this Reference Design, and furnish us a written confirmation to prove such destruction.

1. Restrictions on usage
   1. This Reference Design is provided solely as reference data for designing electronics applications. Customers shall not use this Reference Design for any other purpose, including without limitation, verification of reliability.
   2. This Reference Design is for customer's own use and not for sale, lease or other transfer.
   3. Customers shall not use this Reference Design for evaluation in high or low temperature, high humidity, or high electromagnetic environments.
   4. This Reference Design shall not be used for or incorporated into any products or systems whose manufacture, use, or sale is prohibited under any applicable laws or regulations.

2. Limitations
   1. We reserve the right to make changes to this Reference Design without notice.
   2. This Reference Design should be treated as a reference only. We are not responsible for any incorrect or incomplete data and information.
   3. Semiconductor devices can malfunction or fail. When designing electronics applications by referring to this Reference Design, customers are responsible for complying with safety standards and for providing adequate designs and safeguards for their hardware, software and systems which minimize risk and avoid situations in which a malfunction or failure of semiconductor devices could cause loss of human life, bodily injury or damage to property, including data loss or corruption. Customers must also refer to and comply with the latest versions of all relevant our information, including without limitation, specifications, data sheets and application notes for semiconductor devices, as well as the precautions and conditions set forth in the "Semiconductor Reliability Handbook".
   4. When designing electronics applications by referring to this Reference Design, customers must evaluate the whole system adequately. Customers are solely responsible for all aspects of their own product design or applications. WE ASSUME NO LIABILITY FOR CUSTOMERS' PRODUCT DESIGN OR APPLICATIONS.
   5. No responsibility is assumed by us for any infringement of patents or any other intellectual property rights of third parties that may result from the use of this Reference Design. No license to any intellectual property right is granted by this terms of use, whether express or implied, by estoppel or otherwise.
   6. THIS REFERENCE DESIGN IS PROVIDED "AS IS". WE (a) ASSUME NO LIABILITY WHATSOEVER, INCLUDING WITHOUT LIMITATION, INDIRECT, CONSEQUENTIAL, SPECIAL, OR INCIDENTAL DAMAGES OR LOSS, INCLUDING WITHOUT LIMITATION, LOSS OF PROFITS, LOSS OF OPPORTUNITIES, BUSINESS INTERRUPTION AND LOSS OF DATA, AND (b) DISCLAIM ANY AND ALL EXPRESS OR IMPLIED WARRANTIES AND CONDITIONS RELATED TO THIS REFERENCE DESIGN, INCLUDING WARRANTIES OR CONDITIONS OF MERCHANTABILITY, FITNESS FOR A PARTICULAR PURPOSE, ACCURACY OF INFORMATION, OR NONINFRINGEMENT.

3. Export Control
   Customers shall not use or otherwise make available this Reference Design for any military purposes, including without limitation, for the design, development, use, stockpiling or manufacturing of nuclear, chemical, or biological weapons or missile technology products (mass destruction weapons). This Reference Design may be controlled under the applicable export laws and regulations including, without limitation, the Japanese Foreign Exchange and Foreign Trade Law and the U.S. Export Administration Regulations. Export and re-export of this Reference Design are strictly prohibited except in compliance with all applicable export laws and regulations.

4. Governing Laws
   This terms of use shall be governed and construed by laws of Japan.

RESTRICTIONS ON PRODUCT USE

- Toshiba Electronic Devices & Storage Corporation, and its subsidiaries and affiliates (collectively "TOSHIBA"), reserve the right to make changes to the information in this document, and related hardware, software and systems (collectively "Product") without notice.
- This document and any information herein may not be reproduced without prior written permission from TOSHIBA. Even with TOSHIBA's written permission, reproduction is permissible only if reproduction is without alteration/omission.
- Though TOSHIBA works continually to improve Product's quality and reliability, Product can malfunction or fail. Customers are responsible for complying with safety standards and for providing adequate designs and safeguards for their hardware, software and systems which minimize risk and avoid situations in which a malfunction or failure of Product could cause loss of human life, bodily injury or damage to property, including data loss or corruption. Before customers use the Product, create designs including the Product, or incorporate the Product into their own applications, customers must also refer to and comply with (a) the latest versions of all relevant TOSHIBA information, including without limitation, this document, the specifications, the data sheets and application notes for Product and the precautions and conditions set forth in the "TOSHIBA Semiconductor Reliability Handbook" and (b) the instructions for the application with which the Product will be used with or for. Customers are solely responsible for all aspects of their own product design or applications, including but not limited to (a) determining the appropriateness of the use of this Product in such design or applications; (b) evaluating and determining the applicability of any information contained in this document, or in charts, diagrams, programs, algorithms, sample application circuits, or any other referenced documents; and (c) validating all operating parameters for such designs and applications. **TOSHIBA ASSUMES NO LIABILITY FOR CUSTOMERS' PRODUCT DESIGN OR APPLICATIONS.**
- **PRODUCT IS NEITHER INTENDED NOR WARRANTED FOR USE IN EQUIPMENTS OR SYSTEMS THAT REQUIRE EXTRAORDINARILY HIGH LEVELS OF QUALITY AND/OR RELIABILITY, AND/OR A MALFUNCTION OR FAILURE OF WHICH MAY CAUSE LOSS OF HUMAN LIFE, BODILY INJURY, SERIOUS PROPERTY DAMAGE AND/OR SERIOUS PUBLIC IMPACT ("UNINTENDED USE").** Except for specific applications as expressly stated in this document, Unintended Use includes, without limitation, equipment used in nuclear facilities, equipment used in the aerospace industry, lifesaving and/or life supporting medical equipment, equipment used for automobiles, trains, ships and other transportation, traffic signaling equipment, equipment used to control combustions or explosions, safety devices, elevators and escalators, and devices related to power plant. **IF YOU USE PRODUCT FOR UNINTENDED USE, TOSHIBA ASSUMES NO LIABILITY FOR PRODUCT.** For details, please contact your TOSHIBA sales representative or contact us via our website.
- Do not disassemble, analyze, reverse-engineer, alter, modify, translate or copy Product, whether in whole or in part.
- Product shall not be used for or incorporated into any products or systems whose manufacture, use, or sale is prohibited under any applicable laws or regulations.
- The information contained herein is presented only as guidance for Product use. No responsibility is assumed by TOSHIBA for any infringement of patents or any other intellectual property rights of third parties that may result from the use of Product. No license to any intellectual property right is granted by this document, whether express or implied, by estoppel or otherwise.
- **ABSENT A WRITTEN SIGNED AGREEMENT, EXCEPT AS PROVIDED IN THE RELEVANT TERMS AND CONDITIONS OF SALE FOR PRODUCT, AND TO THE MAXIMUM EXTENT ALLOWABLE BY LAW, TOSHIBA (1) ASSUMES NO LIABILITY WHATSOEVER, INCLUDING WITHOUT LIMITATION, INDIRECT, CONSEQUENTIAL, SPECIAL, OR INCIDENTAL DAMAGES OR LOSS, INCLUDING WITHOUT LIMITATION, LOSS OF PROFITS, LOSS OF OPPORTUNITIES, BUSINESS INTERRUPTION AND LOSS OF DATA, AND (2) DISCLAIMS ANY AND ALL EXPRESS OR IMPLIED WARRANTIES AND CONDITIONS RELATED TO SALE, USE OF PRODUCT, OR INFORMATION, INCLUDING WARRANTIES OR CONDITIONS OF MERCHANTABILITY, FITNESS FOR A PARTICULAR PURPOSE, ACCURACY OF INFORMATION, OR NONINFRINGEMENT.**
- Product may include products using GaAs (Gallium Arsenide). GaAs is harmful to humans if consumed or absorbed, whether in the form of dust or vapor. Handle with care and do not break, cut, crush, grind, dissolve chemically or otherwise expose GaAs in Product.
- Do not use or otherwise make available Product or related software or technology for any military purposes, including without limitation, for the design, development, use, stockpiling or manufacturing of nuclear, chemical, or biological weapons or missile technology products (mass destruction weapons). Product and related software and technology may be controlled under the applicable export laws and regulations including, without limitation, the Japanese Foreign Exchange and Foreign Trade Law and the U.S. Export Administration Regulations. Export and re-export of Product or related software or technology are strictly prohibited except in compliance with all applicable export laws and regulations.
- Please contact your TOSHIBA sales representative for details as to environmental matters such as the RoHS compatibility of Product. Please use Product in compliance with all applicable laws and regulations that regulate the inclusion or use of controlled substances, including without limitation, the EU RoHS Directive. **TOSHIBA ASSUMES NO LIABILITY FOR DAMAGES OR LOSSES OCCURRING AS A RESULT OF NONCOMPLIANCE WITH APPLICABLE LAWS AND REGULATIONS.**

TOSHIBA