Bipolar Transistors Silicon NPN Epitaxial Type (PCT Process)(Bias Resistor built-in Transistor)

RN1307/08/09

1. Applications

- Switching
- Inverter Circuits
- Interfacing
- Driver Circuits

2. Features

(1) AEC-Q101 qualified

(2) The integrated bias resistor reduces the number of external parts required, making it possible to reduce system size and assembly time.

(3) Toshiba offers transistors with a wide range of resistance to accommodate various circuit designs.

(4) Complementary to RN2307 to RN2309

3. Equivalent Circuit

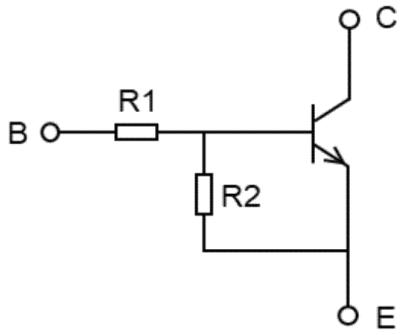

4. Bias Resistor Values

Part No.	R1 (kΩ)	R2 (kΩ)
RN1307	10	47
RN1308	22	47
RN1309	47	22

Start of commercial production
1988-04

©2021-2026
Toshiba Electronic Devices & Storage Corporation

5. Packaging and Pin Assignment

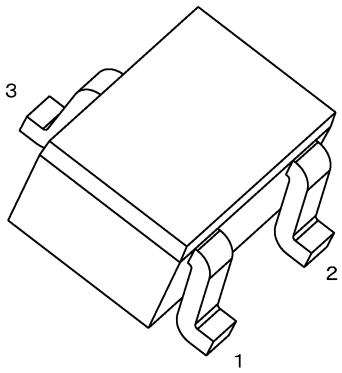

1: Base
2: Emitter
3: Collector

USM

6. Absolute Maximum Ratings (Note) (Unless otherwise specified, T_a = 25 °C)

Characteristics		Symbol	Rating	Unit
Collector-base voltage	RN1307 to RN1309	V_{CBO}	50	V
Collector-emitter voltage		V_{CEO}	50	
Emitter-base voltage	RN1307	V_{EBO}	6	V
	RN1308		7	
	RN1309		15	
Collector current	RN1307 to RN1309	I_C	100	mA
Collector power dissipation		P_C	100	mW
Junction temperature		T_j	150	°C
Storage temperature		T_{stg}	-55 to 150	

Note: Using continuously under heavy loads (e.g. the application of high temperature/current/voltage and the significant change in temperature, etc.) may cause this product to decrease in the reliability significantly even if the operating conditions (i.e. operating temperature/current/voltage, etc.) are within the absolute maximum ratings.
Please design the appropriate reliability upon reviewing the Toshiba Semiconductor Reliability Handbook ("Handling Precautions"/"Derating Concept and Methods") and individual reliability data (i.e. reliability test report and estimated failure rate, etc).

©2021-2026
Toshiba Electronic Devices & Storage Corporation

7. Electrical Characteristics (Unless otherwise specified, T_a = 25 °C)

Characteristics		Symbol	Test Condition	Min	Typ.	Max	Unit
Collector cut-off current	RN1307 to RN1309	I_{CBO}	V_{CB} = 50 V, I_E = 0 mA	—	—	100	nA
		I_{CEO}	V_{CE} = 50 V, I_B = 0 mA	—	—	500	
Emitter cut-off current	RN1307	I_{EBO}	V_{EB} = 6 V, I_C = 0 mA	0.081	—	0.15	mA
	RN1308		V_{EB} = 7 V, I_C = 0 mA	0.078	—	0.145	
	RN1309		V_{EB} = 15 V, I_C = 0 mA	0.167	—	0.311	
DC current gain	RN1307	h_{FE}	V_{CE} = 5 V, I_C = 10 mA	80	—	—	—
	RN1308			80	—	—	
	RN1309			70	—	—	
Collector-emitter saturation voltage	RN1307 to RN1309	$V_{CE(sat)}$	I_C = 5 mA, I_B = 0.25 mA	—	0.1	0.3	V
Input voltage (ON)	RN1307	$V_{I(ON)}$	V_{CE} = 0.2 V, I_C = 5 mA	0.7	—	1.8	V
	RN1308			1.0	—	2.6	
	RN1309			2.2	—	5.8	
Input voltage (OFF)	RN1307	$V_{I(OFF)}$	V_{CE} = 5 V, I_C = 0.1 mA	0.5	—	1.0	V
	RN1308			0.6	—	1.16	
	RN1309			1.5	—	2.6	
Transition frequency	RN1307 to RN1309	f_T	V_{CE} = 10 V, I_C = 5 mA	—	250	—	MHz
Collector output capacitance	RN1307 to RN1309	C_{ob}	V_{CB} = 10 V, I_E = 0 mA, f = 1 MHz	—	3	6	pF
Input resistance	RN1307	R_1	—	7	10	13	kΩ
	RN1308			15.4	22	28.6	
	RN1309			32.9	47	61.1	
Resistor ratio	RN1307	R1/R2	—	0.191	0.213	0.232	—
	RN1308			0.421	0.468	0.515	
	RN1309			1.92	2.14	2.35	

8. Marking

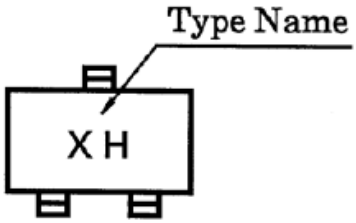

Marking RN1307

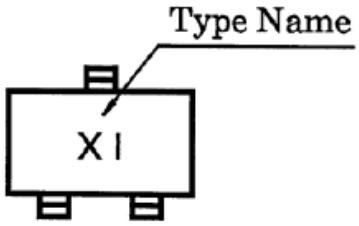

Marking RN1308

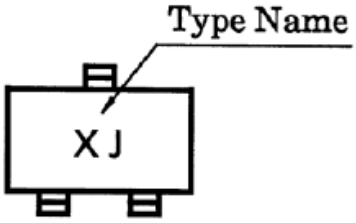

Marking RN1309

©2021-2026
Toshiba Electronic Devices & Storage Corporation

9. Characteristics Curves (Note)

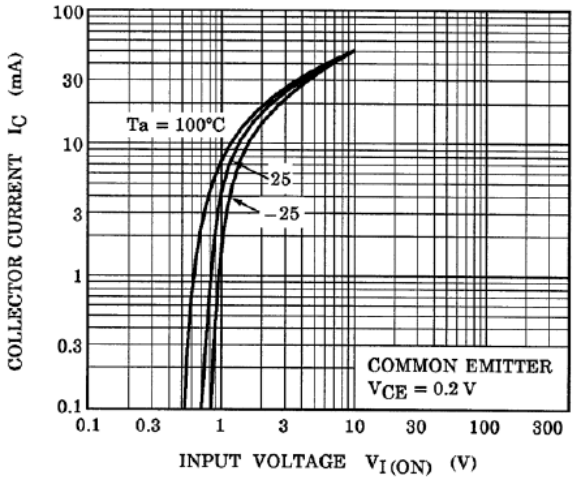

Fig. 9.1 RN1307 I_C-$V_{I(ON)}$

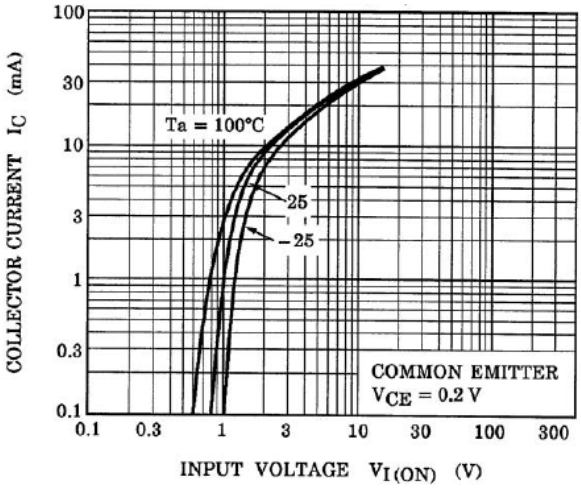

Fig. 9.2 RN1308 I_C-$V_{I(ON)}$

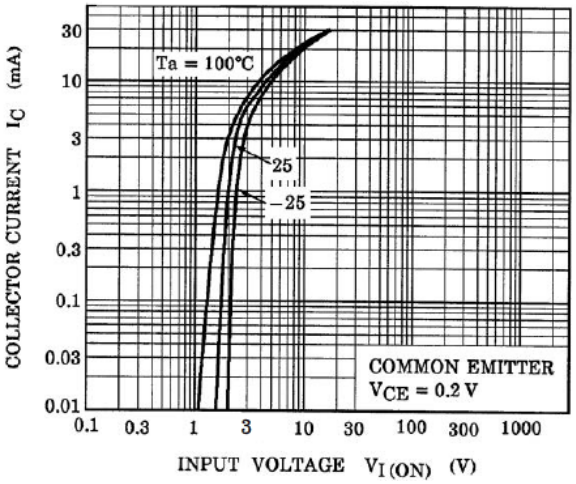

Fig. 9.3 RN1309 I_C-$V_{I(ON)}$

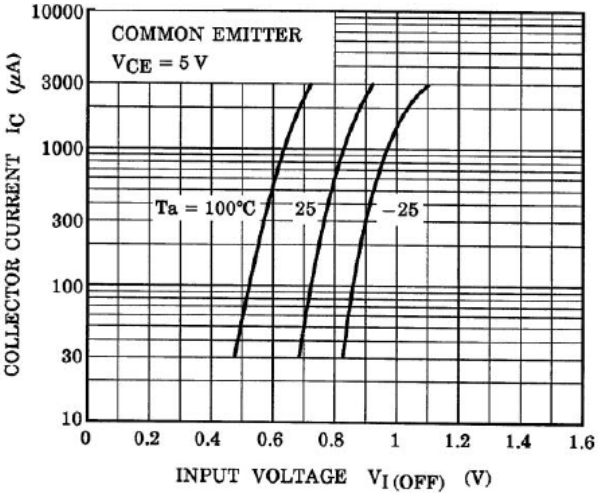

Fig. 9.4 RN1307 I_C-$V_{I(OFF)}$

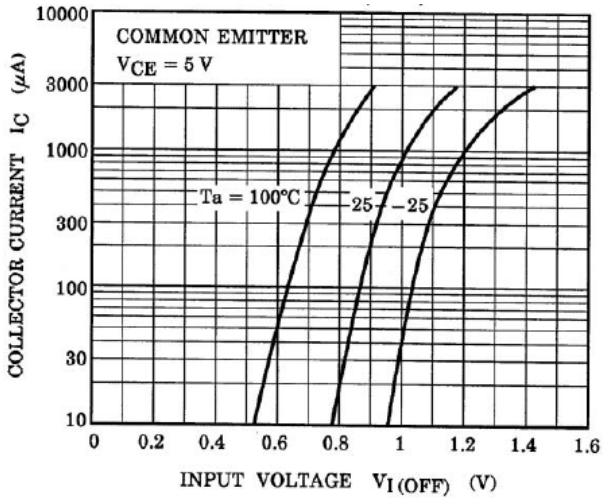

Fig. 9.5 RN1308 I_C-$V_{I(OFF)}$

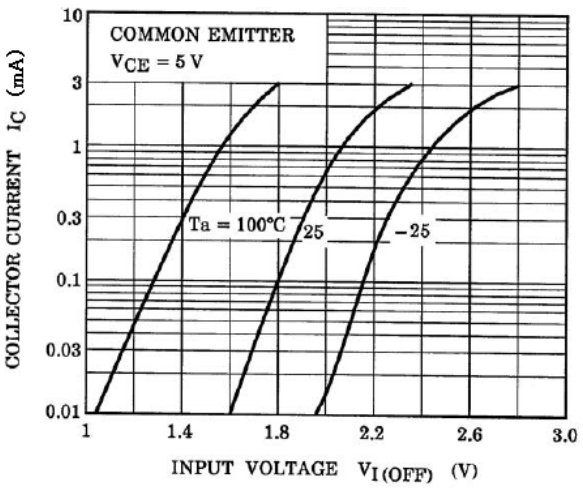

Fig. 9.6 RN1309 I_C-$V_{I(OFF)}$

©2021-2026
Toshiba Electronic Devices & Storage Corporation

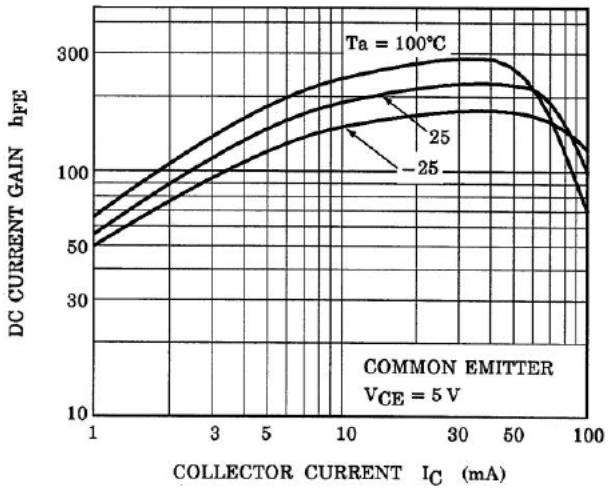

Fig. 9.7 RN1307 h_{FE}-I_C

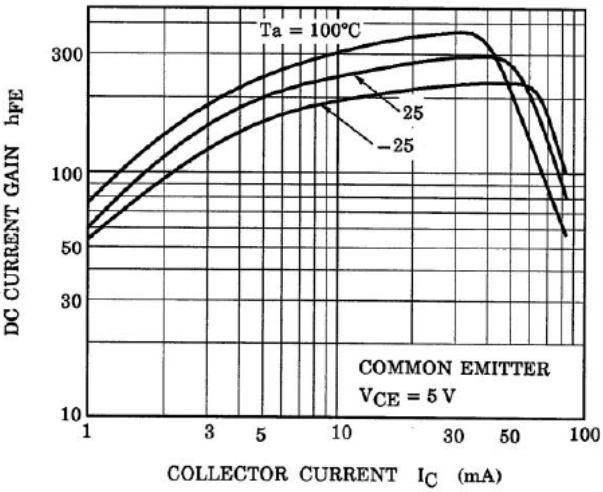

Fig. 9.8 RN1308 h_{FE}-I_C

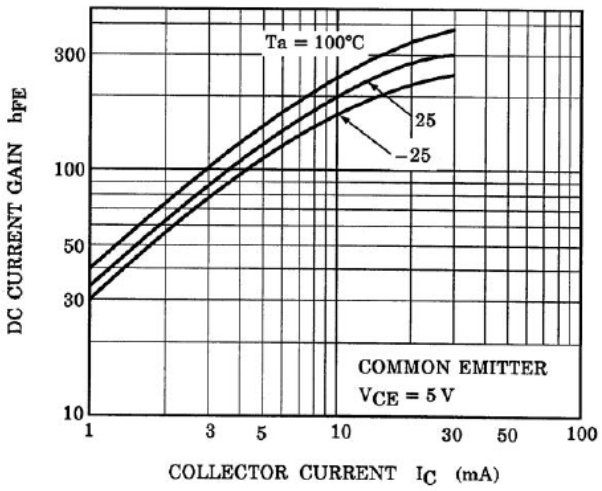

Fig. 9.9 RN1309 h_{FE}-I_C

Note: The above characteristics curves are presented for reference only and not guaranteed by production test, unless otherwise noted.

©2021-2026
Toshiba Electronic Devices & Storage Corporation

Package Dimensions

Unit: mm

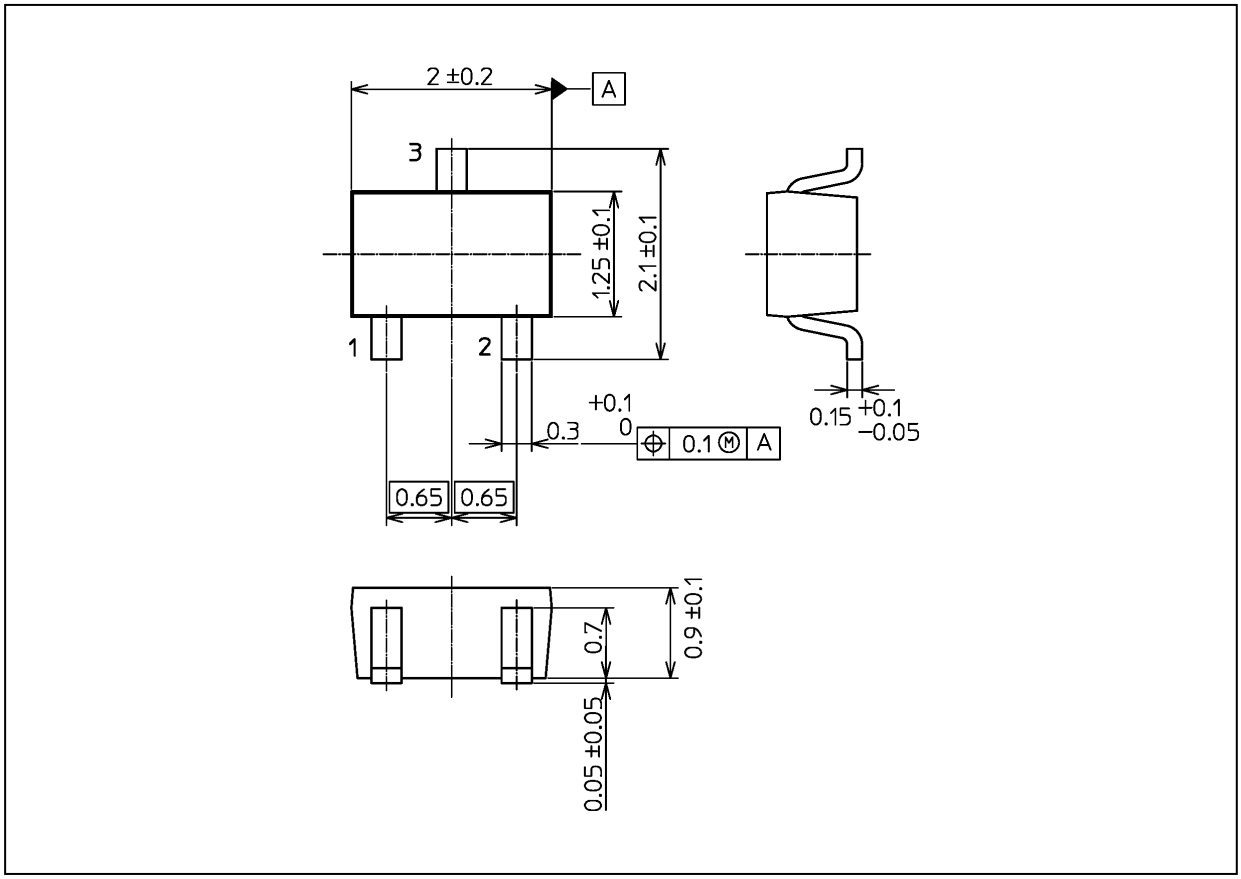

Weight: 6.0 mg (typ.)

Package Name(s)
Nickname: USM

RESTRICTIONS ON PRODUCT USE

Toshiba Corporation and its subsidiaries and affiliates are collectively referred to as "TOSHIBA".
Hardware, software and systems described in this document are collectively referred to as "Product".

- TOSHIBA reserves the right to make changes to the information in this document and related Product without notice.
- This document and any information herein may not be reproduced without prior written permission from TOSHIBA. Even with TOSHIBA's written permission, reproduction is permissible only if reproduction is without alteration/omission.
- Though TOSHIBA works continually to improve Product's quality and reliability, Product can malfunction or fail. Customers are responsible for complying with safety standards and for providing adequate designs and safeguards for their hardware, software and systems which minimize risk and avoid situations in which a malfunction or failure of Product could cause loss of human life, bodily injury or damage to property, including data loss or corruption. Before customers use the Product, create designs including the Product, or incorporate the Product into their own applications, customers must also refer to and comply with (a) the latest versions of all relevant TOSHIBA information, including without limitation, this document, the specifications, the data sheets and application notes for Product and the precautions and conditions set forth in the "TOSHIBA Semiconductor Reliability Handbook" and (b) the instructions for the application with which the Product will be used with or for. Customers are solely responsible for all aspects of their own product design or applications, including but not limited to (a) determining the appropriateness of the use of this Product in such design or applications; (b) evaluating and determining the applicability of any information contained in this document, or in charts, diagrams, programs, algorithms, sample application circuits, or any other referenced documents; and (c) validating all operating parameters for such designs and applications. **TOSHIBA ASSUMES NO LIABILITY FOR CUSTOMERS' PRODUCT DESIGN OR APPLICATIONS.**
- **PRODUCT IS NEITHER INTENDED NOR WARRANTED FOR USE IN EQUIPMENTS OR SYSTEMS THAT REQUIRE EXTRAORDINARILY HIGH LEVELS OF QUALITY AND/OR RELIABILITY, AND/OR A MALFUNCTION OR FAILURE OF WHICH MAY CAUSE LOSS OF HUMAN LIFE, BODILY INJURY, SERIOUS PROPERTY DAMAGE AND/OR SERIOUS PUBLIC IMPACT ("UNINTENDED USE").** Except for specific applications as expressly stated in this document, Unintended Use includes, without limitation, equipment used in nuclear facilities, equipment used in the aerospace industry, Class 3 medical devices, equipment used for automobiles, and military vehicles and munitions. **IF YOU USE PRODUCT FOR UNINTENDED USE, TOSHIBA ASSUMES NO LIABILITY FOR PRODUCT.** For details, please contact your TOSHIBA sales representative or contact us via our website.
- Do not disassemble, analyze, reverse-engineer, alter, modify, translate or copy Product, whether in whole or in part.
- Product shall not be used for or incorporated into any products or systems whose manufacture, use, or sale is prohibited under any applicable laws or regulations.
- The information contained herein is presented only as guidance for Product use. No responsibility is assumed by TOSHIBA for any infringement of patents or any other intellectual property rights of third parties that may result from the use of Product. No license to any intellectual property right is granted by this document, whether express or implied, by estoppel or otherwise.
- **ABSENT A WRITTEN SIGNED AGREEMENT, EXCEPT AS PROVIDED IN THE RELEVANT TERMS AND CONDITIONS OF SALE FOR PRODUCT, AND TO THE MAXIMUM EXTENT ALLOWABLE BY LAW, TOSHIBA (1) ASSUMES NO LIABILITY WHATSOEVER, INCLUDING WITHOUT LIMITATION, INDIRECT, CONSEQUENTIAL, SPECIAL, OR INCIDENTAL DAMAGES OR LOSS, INCLUDING WITHOUT LIMITATION, LOSS OF PROFITS, LOSS OF OPPORTUNITIES, BUSINESS INTERRUPTION AND LOSS OF DATA, AND (2) DISCLAIMS ANY AND ALL EXPRESS OR IMPLIED WARRANTIES AND CONDITIONS RELATED TO SALE, USE OF PRODUCT, OR INFORMATION, INCLUDING WARRANTIES OR CONDITIONS OF MERCHANTABILITY, FITNESS FOR A PARTICULAR PURPOSE, ACCURACY OF INFORMATION, OR NONINFRINGEMENT.**
- Do not use or otherwise make available Product or related software or technology for any military purposes, including without limitation, for the design, development, use, stockpiling or manufacturing of nuclear, chemical, or biological weapons or missile technology products (mass destruction weapons). Product and related software and technology may be controlled under the applicable export laws and regulations including, without limitation, the Japanese Foreign Exchange and Foreign Trade Law and the U.S. Export Administration Regulations. Export and re-export of Product or related software or technology are strictly prohibited except in compliance with all applicable export laws and regulations.
- Please contact your TOSHIBA sales representative for details as to environmental matters such as the RoHS compatibility of Product. Please use Product in compliance with all applicable laws and regulations that regulate the inclusion or use of controlled substances, including without limitation, the EU RoHS Directive. **TOSHIBA ASSUMES NO LIABILITY FOR DAMAGES OR LOSSES OCCURRING AS A RESULT OF NONCOMPLIANCE WITH APPLICABLE LAWS AND REGULATIONS.**

©2021-2026
Toshiba Electronic Devices & Storage Corporation