TOSHIBA
Leading Innovation

Semiconductor Catalog Sep. 2017

Photocouplers and Photorelays Product Notes

SEMICONDUCTOR & STORAGE PRODUCTS
https://toshiba.semicon-storage.com/

Toshiba began manufacturing transistor-output photocouplers in 1972, and has been developing photocouplers for more than 40 years. Toshiba offers photocouplers that consist of a high-power and high-reliability infrared LED coupled with a photodetector fabricated using the latest technology which realized low power consumption for environmental friendliness.
Also Encapsulated in an insulated package, Toshiba's photocouplers are compliant with major international safety standards, and making them ideal for applications that require enhanced safety.

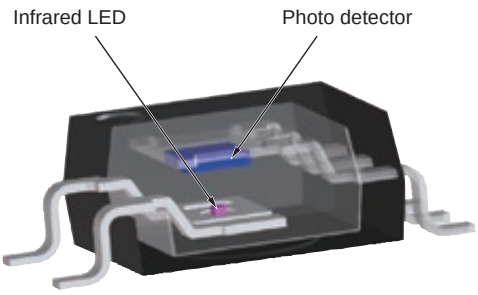

Applications

Toshiba offers photocouplers suitable for various applications, including industrial equipment, automotive electronics, clean energy equipment, office equipment, home appliances, and housing equipment.

Industrial equipment

- Servo amplifiers
- Robots
- Machine tools
- High-output power supplies
- Security systems
- Semiconductor testers
- Programmable Logic Controller (PLC)

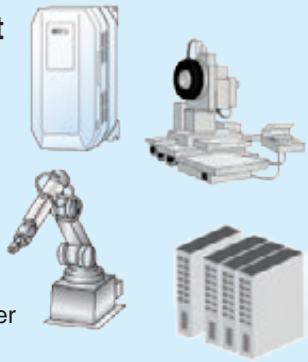

Office equipment

- Uninterruptible power supplies (UPS)
- Server power supplies
- Copying machines
- Printers
- Electronic Cash Register (ECR)
- Point of Sale System (POS)

Automotive electronics

- Battery management systems (BMS)
- DC-DC converters
- Telematics
- EV/HEV

Home appliances and housing equipment

- Air conditioners
- Washing machines
- Televisions
- Refrigerators
- Induction heating cookers (IH)

Clean energy equipment

- Photovoltaic power generation
- Wind power generation
- Smart meters
- Fuel cells
- EV charging stations

Contents

Applications 2
Package Lineup 3
Package
Package Dimensions and Land Pattern Examples 4
Rank Marking 12
Packing
Magazine Packing Specification 14
Tape-and-Reel Specification 16
Projected Operating Life of Photocouplers 18

This Catalog contains the latest information available as of September 1, 2017.

Package Lineup

Toshiba's photocouplers are available in various types of packages, ranging from conventional DIP packages to ultra-small surface-mount packages.

			Isolation Amplifier	Smart IGBT Gate Driver Photocouplers	High-Speed Logic Photocouplers	IPM Driver Photocouplers	IGBT/MOSFET Driver Photocouplers	Triac-Output Photocouplers	Thyristor-Output Photocouplers	Transistor-Output Photocouplers	Photovoltaic-Output Photocouplers	Photorelays
Through Hole	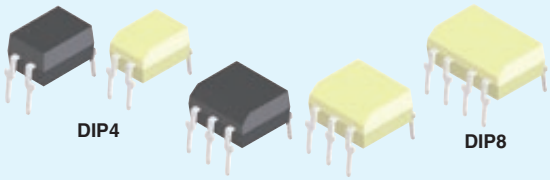 DIP4 DIP6 DIP8 ※Toshiba offers also a lead-forming solution for the surface mounting of photocouplers in DIP packages depends on request.	DIP4						✓		✓		✓
		DIP6						✓	✓	✓	✓	✓
		DIP8	✓		✓	✓	✓		✓			✓
Surface Mount	SDIP6	SDIP6			✓	✓	✓					
	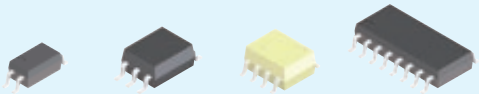 SO4 SO6 SO8 SO16 ※Reinforced insulation	SO4								✓		
		SO6			✓	✓	✓	✓		✓	✓	✓
		SO8			✓	✓	✓					
		SO16								✓		
	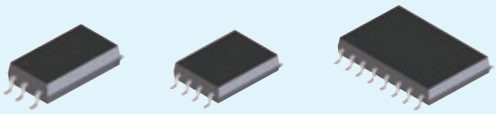 SO6L SO8L SO16L ※Reinforced insulation	SO6L			✓	✓	✓			✓		
		SO8L	✓		✓		✓					
		SO16L		✓								
	MFSOP6	MFSOP6			✓				✓		✓	
	2.54SOP4 2.54SOP6 2.54SOP8	2.54SOP4										✓
		2.54SOP6										✓
		2.54SOP8										✓
	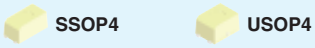 SSOP4 USOP4	SSOP4									✓	✓
		USOP4										✓
	VSON4 S-VSON4 S-VSON4T ※Ultra-small leadless packages	VSON4										✓
		S-VSON4										✓
		S-VSON4T										✓

Package Dimensions and Land Pattern Examples

Unit: mm

4 pin DIP type

DIP4 (standard)

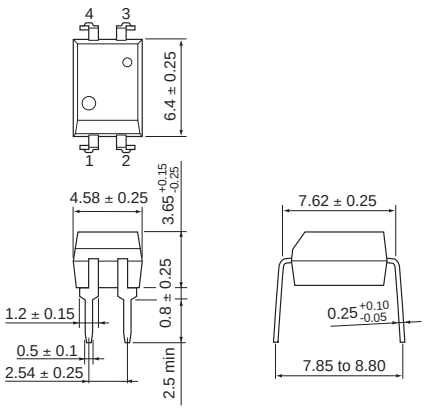

DIP4 (F type)
DIP4 (LF2)

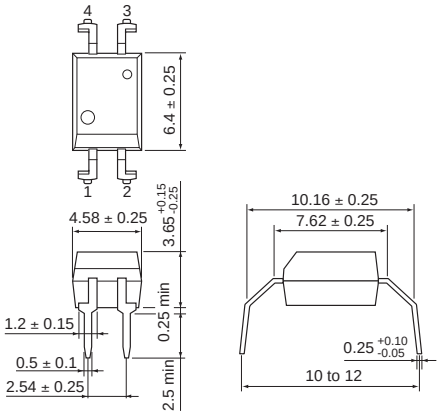

DIP4 (LF1)

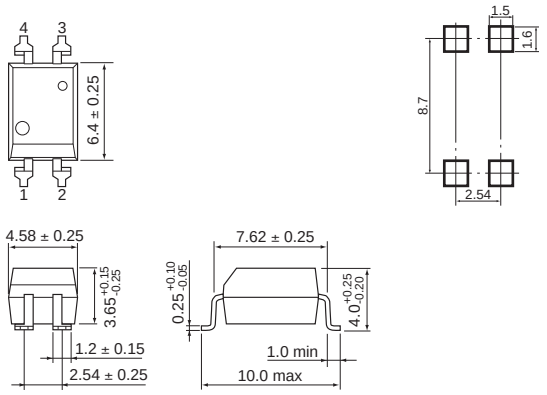

DIP4 (LF4)

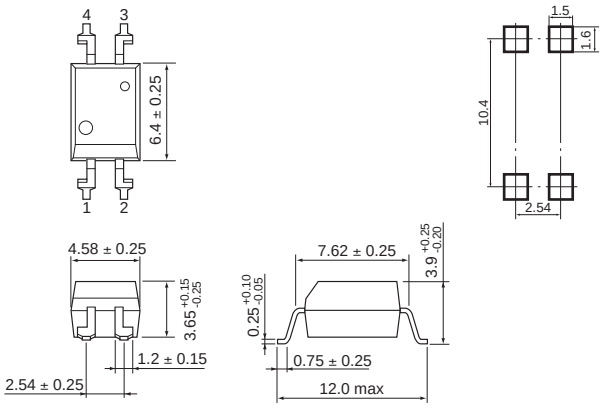

DIP4 (LF5)

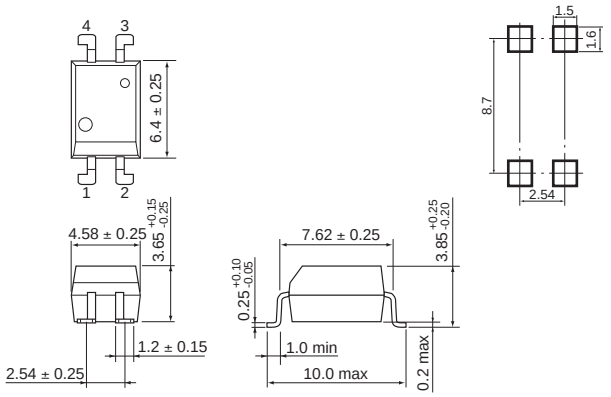

※ All dimensions without a tolerance are reference dimensions.
※ The PCB land Pattern dimensions shown above are for reference only and should be confirmed it by implementation.

Unit: mm

6 pin DIP type

DIP6 (standard)

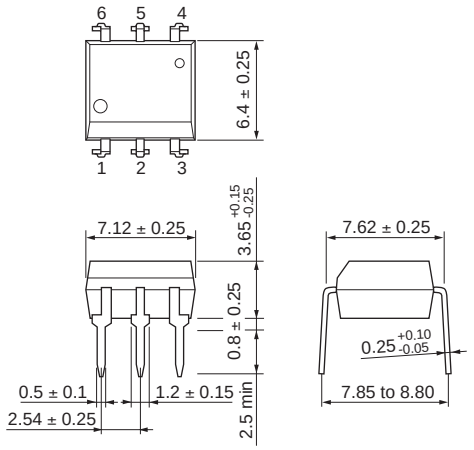

DIP6 (F type)
DIP6 (LF2)

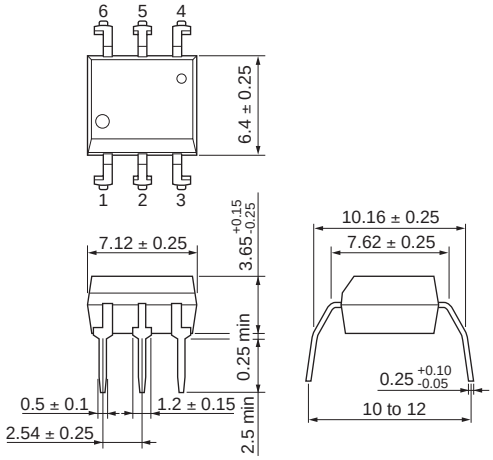

DIP6 (LF1)

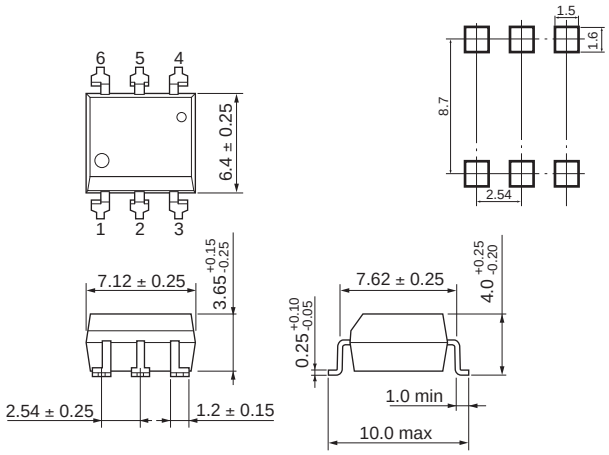

DIP6 (LF4)

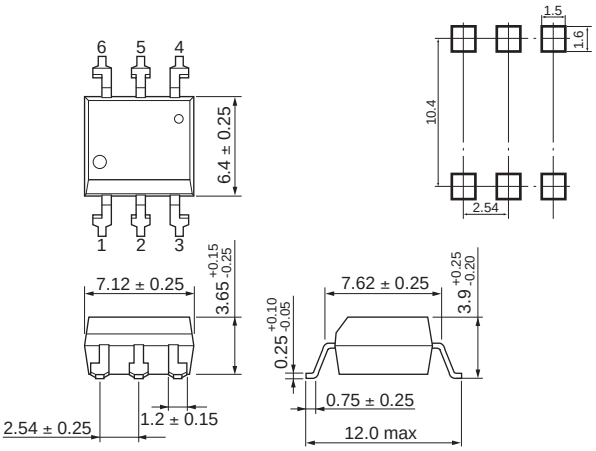

DIP6 (LF5)

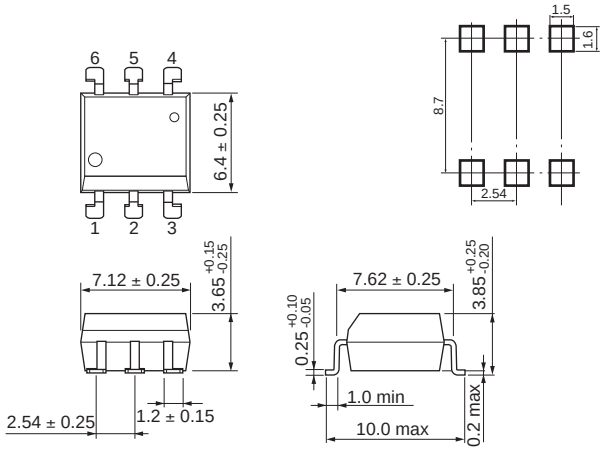

※ All dimensions without a tolerance are reference dimensions.
※ The PCB land Pattern dimensions shown above are for reference only and should be confirmed it by implementation.

Unit: mm

8 pin DIP type

DIP8 (standard)

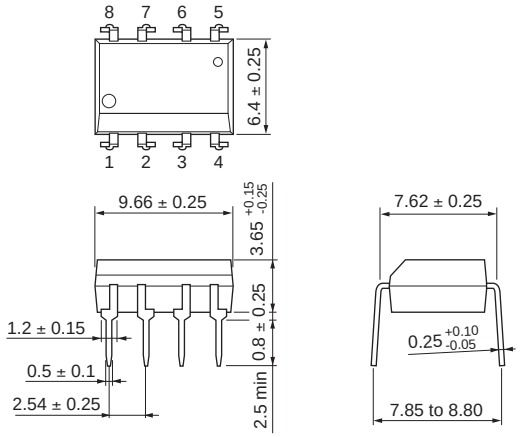

DIP8 (F type)
DIP8 (LF2)

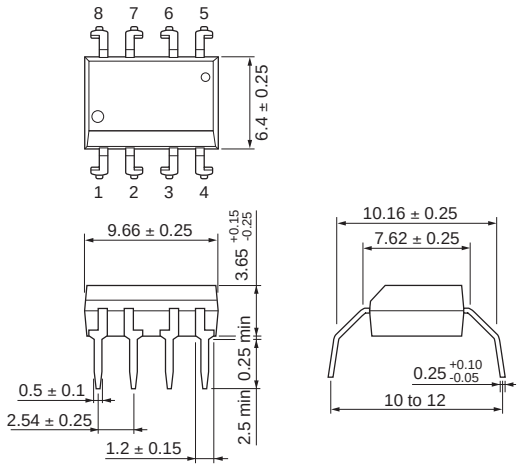

DIP8 (LF1)

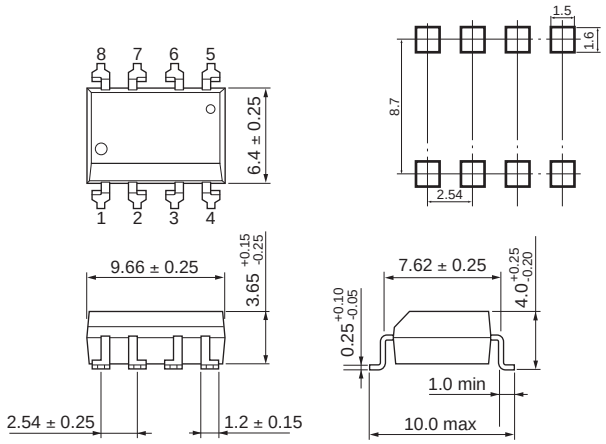

DIP8 (LF4)

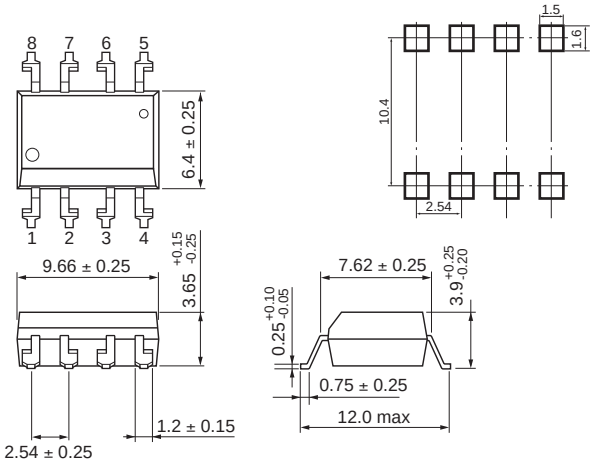

DIP8 (LF5)

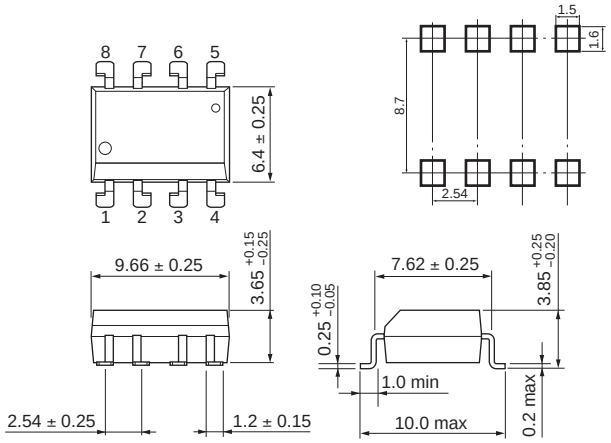

※ All dimensions without a tolerance are reference dimensions.
※ The PCB land Pattern dimensions shown above are for reference only and should be confirmed it by implementation.

Unit: mm

SDIP type / Other DIP type

SDIP6

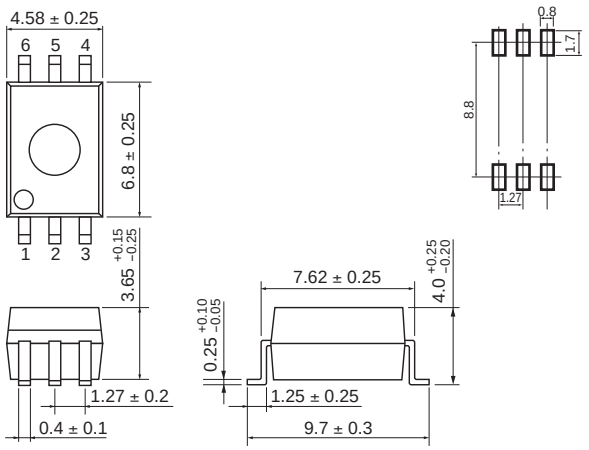

SDIP6 (F type)

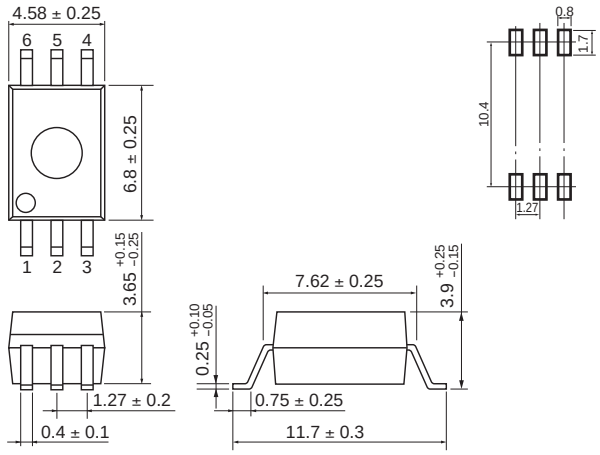

5 pin DIP6

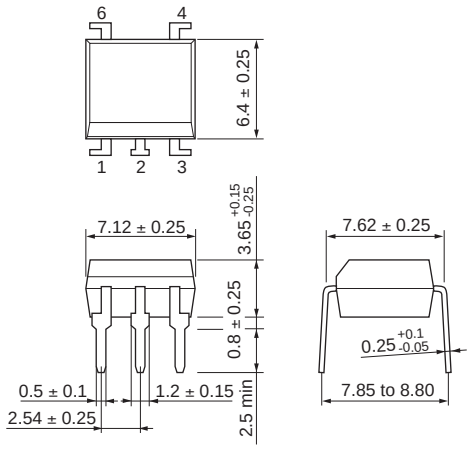

5 pin DIP6 (cut)

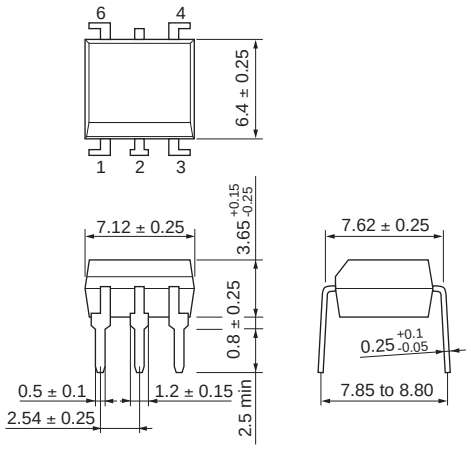

7 pin DIP8

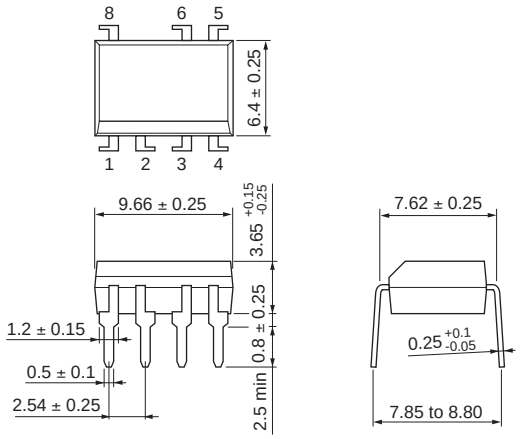

※ All dimensions without a tolerance are reference dimensions.
※ The PCB land Pattern dimensions shown above are for reference only and should be confirmed it by implementation.

Unit: mm

SO type

SO4

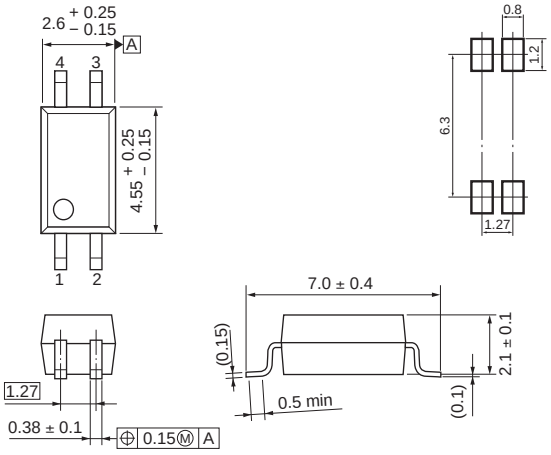

4 pin SO6

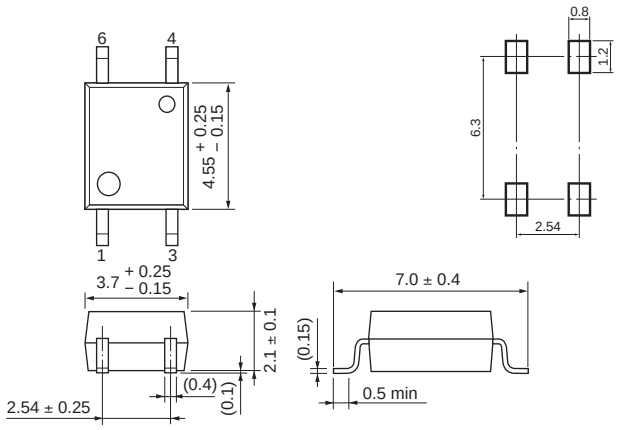

SO8

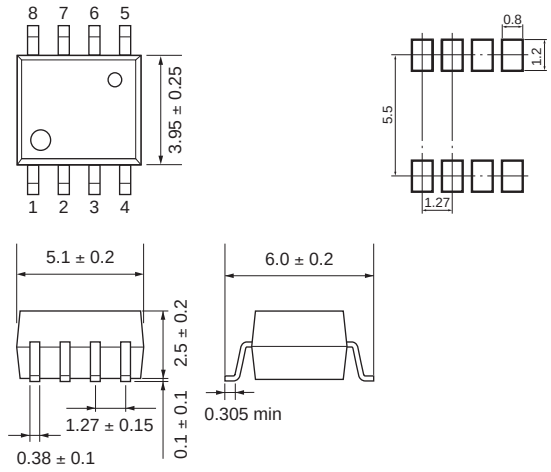

5 pin SO6

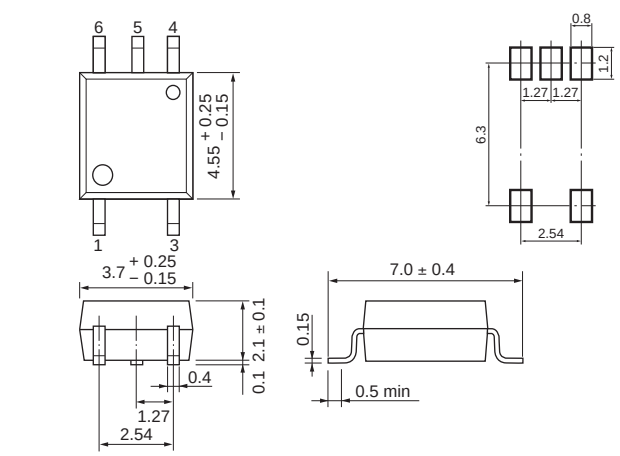

SO16

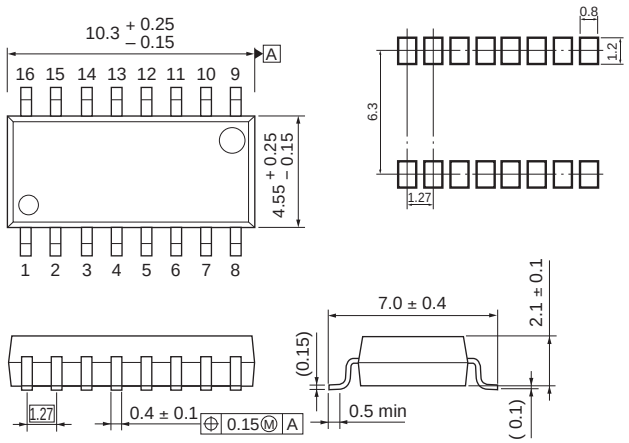

※ All dimensions without a tolerance are reference dimensions.
※ The PCB land Pattern dimensions shown above are for reference only and should be confirmed it by implementation.

Unit: mm

SOL type

SO6L

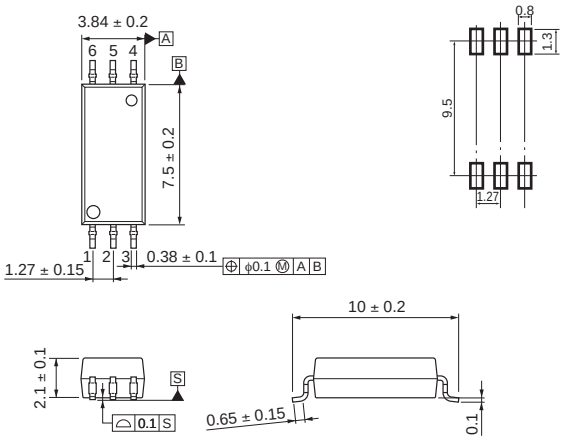

SO6L (LF4)

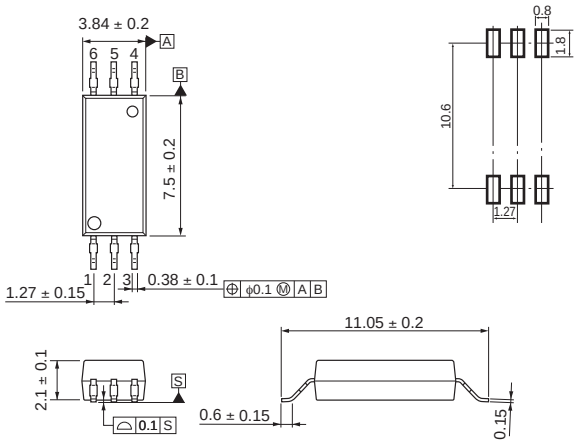

SO8L

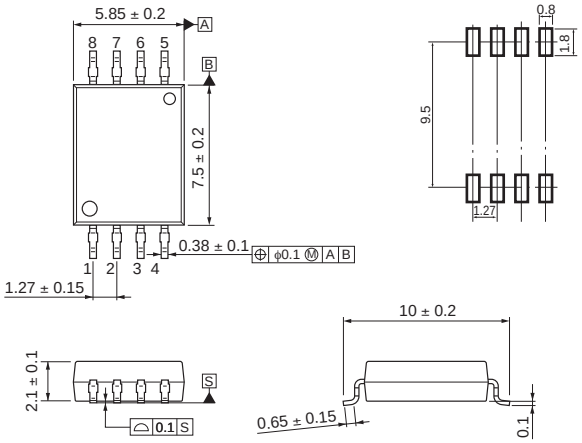

SO8L (LF4)

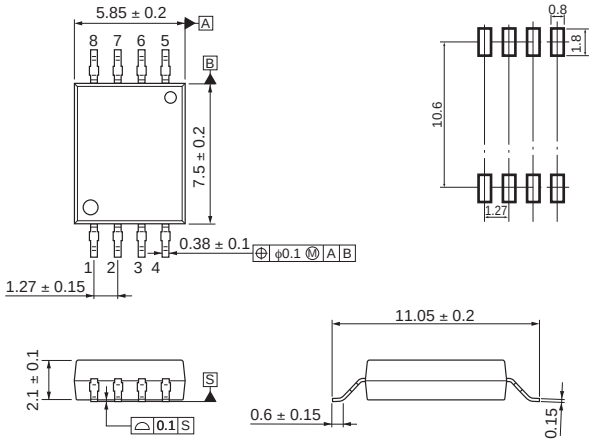

SO16L

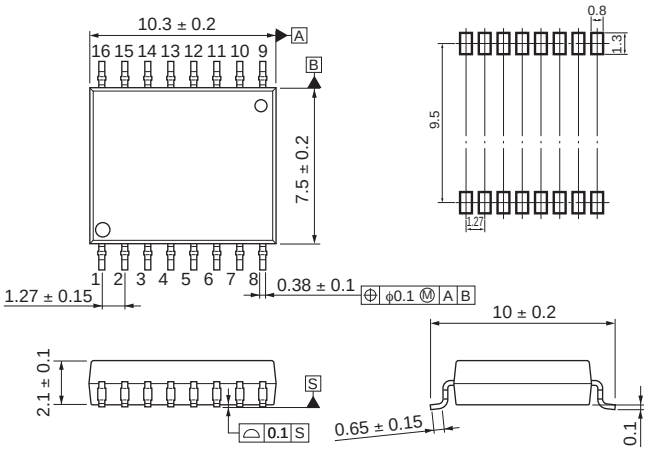

4 pin SO6L

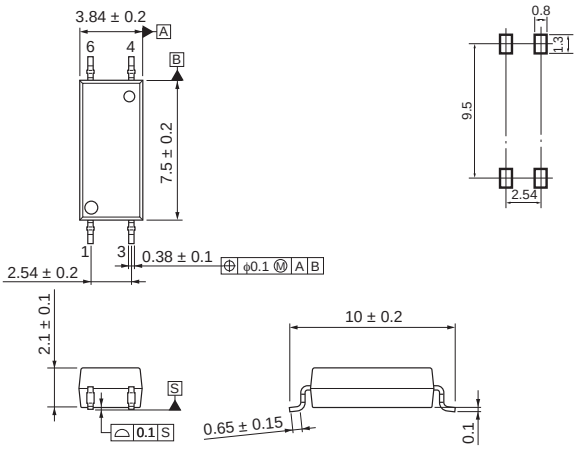

※ All dimensions without a tolerance are reference dimensions.
※ The PCB land Pattern dimensions shown above are for reference only and should be confirmed it by implementation.

Unit: mm

MFSOP type

4 pin MFSOP6

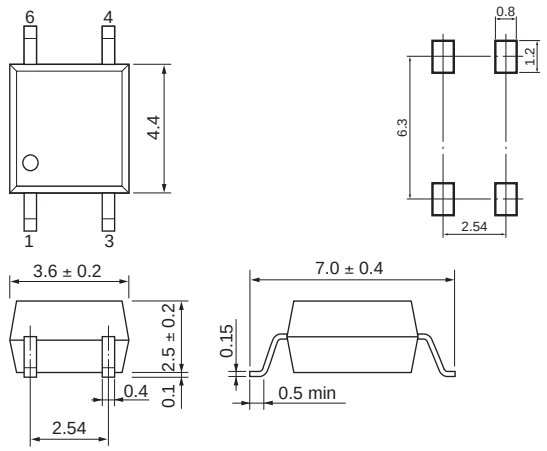

4 pin MFSOP6 (cut)

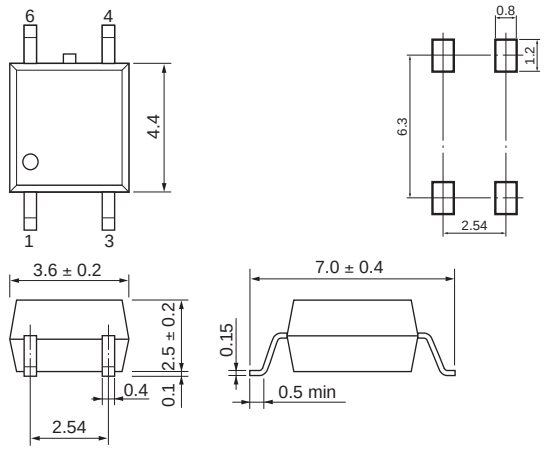

5 pin MFSOP6

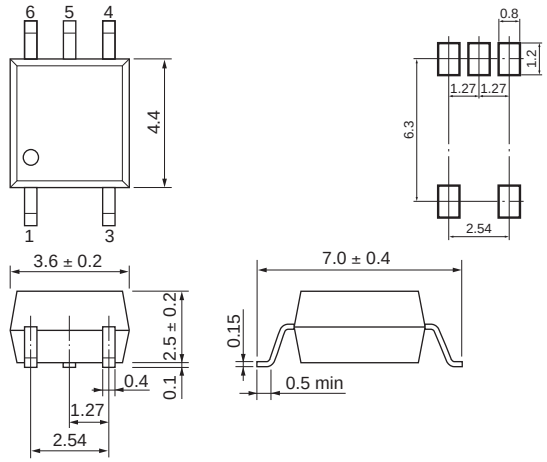

2.54SOP type

2.54SOP4

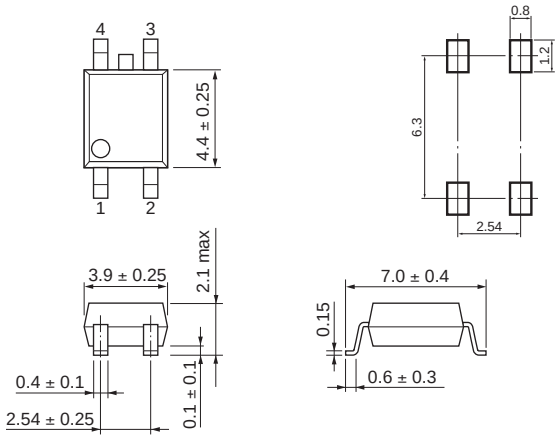

2.54SOP6

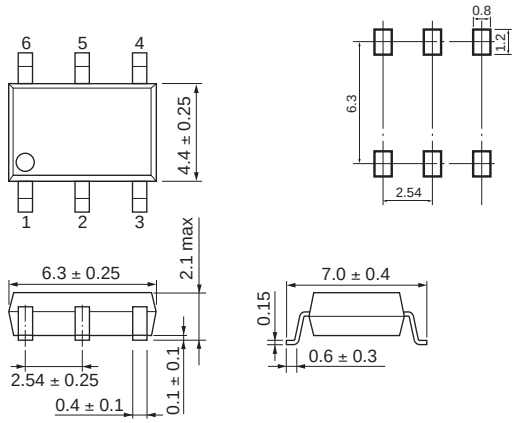

2.54SOP8

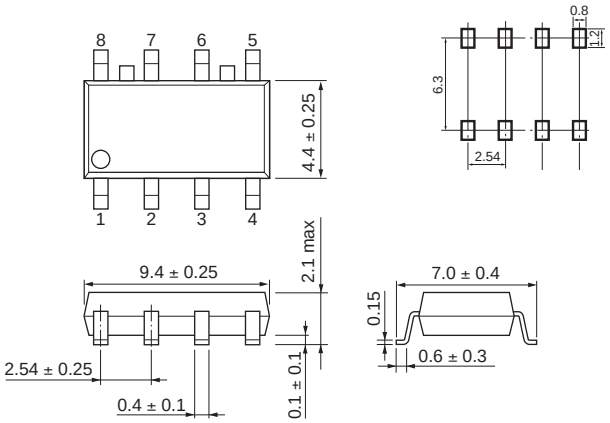

※ All dimensions without a tolerance are reference dimensions.
※ The PCB land Pattern dimensions shown above are for reference only and should be confirmed it by implementation.

Unit: mm

VSON/USOP/SSOP type

S-VSON4T

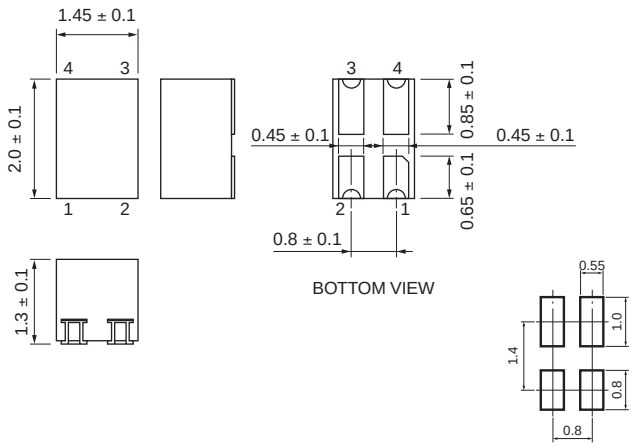

USOP4

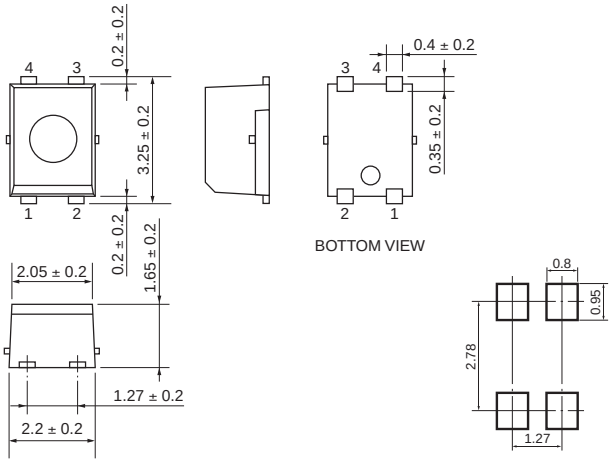

S-VSON4

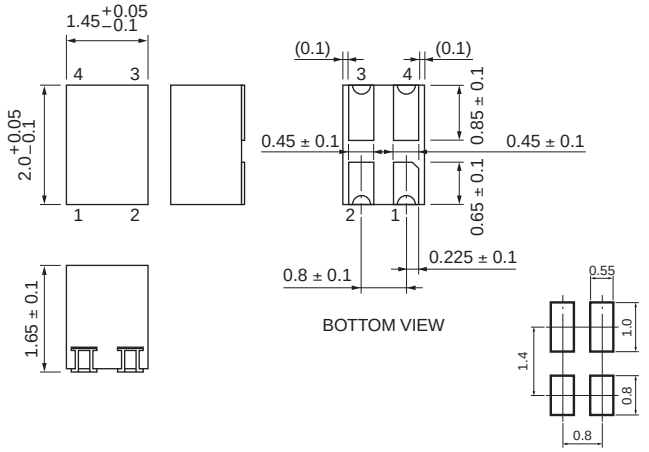

SSOP4

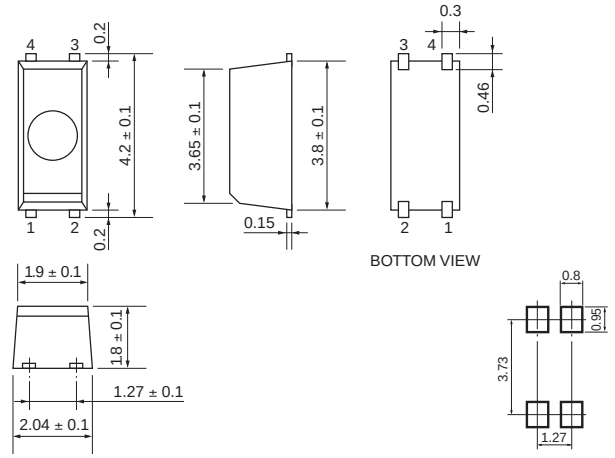

VSON4

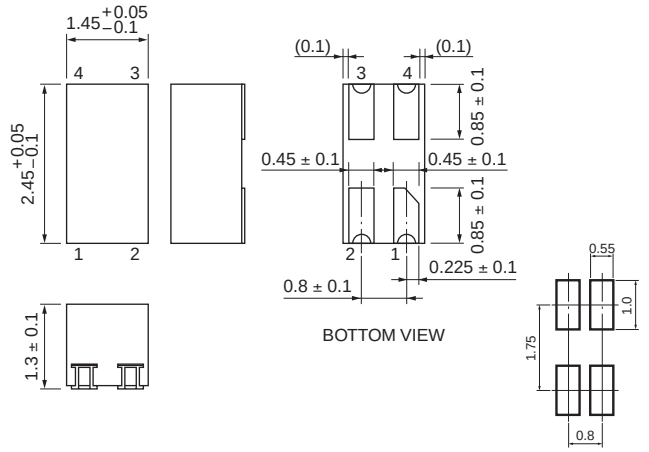

※ All dimensions without a tolerance are reference dimensions.
※ The PCB land Pattern dimensions shown above are for reference only and should be confirmed it by implementation.

Rank Marking

Transistor-output photocouplers are ranked according to their Current Transfer Ratio (CTR) ranges, whereas thyristor-output and triac-output photocouplers are ranked according to their maximum I_{FT} value. The following gives the rank classifications and rank marks printed on packages. Nevertheless, note that the rank classifications differ from product to product. For details, please refer to the relevant technical datasheets.

Current Transfer Ratios (CTRs) of Transistor-Output Photocouplers

Applied CTR Rank Selections are as bellows.
(○ Available, △ Contact your Toshiba sales representative)

Input Type	Rank Name		None		Y	YH	GR	GRL	GRH	GB		BL	BLL	LA(*)	LGB(*)
	CTR Rank Marking		Blank		**YE**	**Y+**	**GR**	**G**	**G+**	**GB**		**BL**	**B**	**LA**	**LB**
	CTR	min	50	50	50	75	100	100	150	100	100	200	200	50	100
		max	400	600	150	150	300	200	300	400	600	600	400	600	600
DC Input	TLP183			○	○	○	○	○	○		○	○	○		
	TLP185(SE			○	○	○	○	○	○		○	○	○		
	TLP188			○							○				
	TLP291-4		○							○					
	TLP291(SE			○	○	○	○	○	○		○	○	○		
	TLP293			○	○	○	○	○	○		○	○	○		
	TLP293-4			○							○			○	○
	TLP383			○	○	○	○	○	○		○	○	○		
	TLP385			○	○	○	○	○	○		○	○	○		
	TLP388			○							○				
	TLP731			○	△		○				○	△			
	TLP732			○	△		○				○	△			
	TLP785/785F			○	○	○	○	○	○		○	○	○		
AC Input	TLP182			○	○		○				○	○			
	TLP184(SE			○	○		○				○	○			
	TLP290-4		○							○					
	TLP290(SE			○	○		○				○	○			
	TLP292			○	○		○				○	○			
	TLP292-4			○							○			○	○

(*): The LA and LB rank are made CTR rank of the low input current condition.

Marking Examples

TLP183 (4 pin SO6 Package)

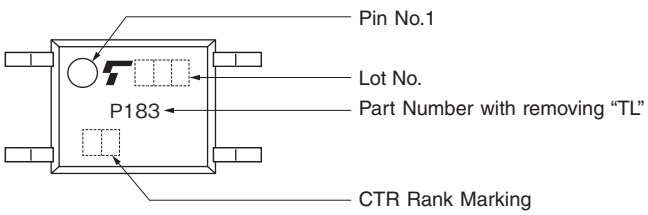

TLP785 (DIP4 Package)

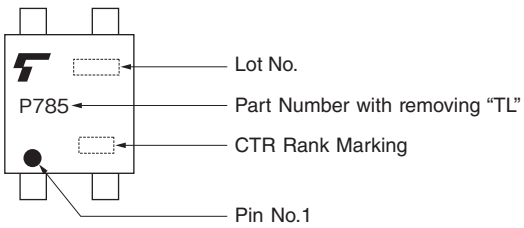

Trigger LED Current (I_{FT}) of Triac- and Thyristor-Output Photocouplers

	Off-state Output Terminal Voltage V_{DRM}	Part Number	Trigger LED Current I_{FT} (mA) max			
		Rank Name	None	IFT7	IFT5	IFT2
		I_{FT} Rank Marking	**Blank**	**T7**	**T5**	**T2**
Triac-output	600 V	TLP265J	10	7	—	—
		TLP266J	10	7	—	—
		TLP267J	3	—	—	2
		TLP268J	3	—	—	2
		TLP360J/TLP360JF	10	7	—	—
		TLP361J/TLP361JF	10	7	—	—
	800 V	TLP669L(S)/TLP669LF(S)	10	—	5	—
Thyristor-output	400 V	TLP148G	10	7	—	—

Only devices with an I_{FT} rank are listed herein.

Marking Examples

TLP265J (4 pin SO6 Package)

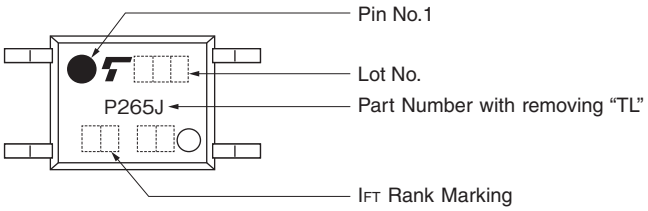

Note: 1. Specify both the part number and a rank in this format when ordering.
Examples: TLP183 (GB), TLP265J (T7)

2. For applying to safety standard certification, please specify the part number only.
Examples: Part number: TLP183 (GB) → Use this part number: TLP183

Packing

Magazine Packing Specification

Unit: mm

DIP type		Standard			Lead Forming LF1, LF2/Ftype, LF4, LF5		
Magazine	Dimensions	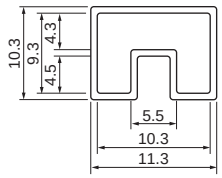 L = 525 t = 0.5			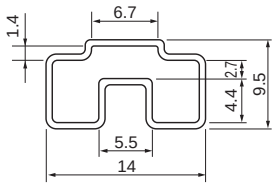 L = 525 t = 0.5		
	Pin Count	4 pin	6 pin	8 pin	4 pin	6 pin	8 pin
	Quantities per Magazine	100 pcs	50 pcs	50 pcs	100 pcs	50 pcs	50 pcs

Carton	Number of Magazines		4	20	60	4	40
	Carton Dimensions	A	50 mm	67 mm	123 mm	60 mm	135 mm
		B	12 mm	51 mm	76 mm	13 mm	58 mm
		C	531 mm	559 mm	568 mm	531 mm	568 mm
	Label Position		Y	Y	X	Y	X

※ The magazine dimensions and packing specifications of the TLP785 differ. For details, contact your Toshiba sales representative.

Unit: mm

SDIP type		SDIP6
Magazine	Dimensions	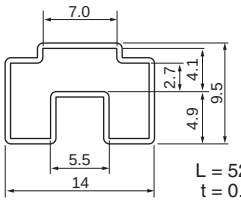 L = 525 t = 0.5
	Quantities per Magazine	100 pcs

Carton	Number of Magazines		40
	Carton Dimensions	A	135 mm
		B	58 mm
		C	568 mm
	Label Position		X

Unit: mm

MFSOP type		MFSOP6
Magazine	Dimensions	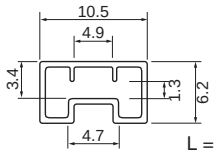 L = 555 t = 0.5
	Quantities per Magazine	150 pcs

Carton	Number of Magazines		4	24	40
	Carton Dimensions	A	29 mm	77 mm	67 mm
		B	13 mm	31 mm	55 mm
		C	563 mm	586 mm	586 mm
	Label Position		Y	Y	X

Unit: mm

2.54SOP type		2.54SOP		
Magazine	Dimensions	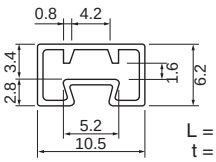 L = 555 t = 0.5		
	Pin Count	4 pin (2.54SOP4)	6 pin (2.54SOP6)	8 pin (2.54SOP8)
	Quantities per Magazine	100 pcs	75 pcs	50 pcs

Carton	Number of Magazines		4	24	40
	Carton Dimensions	A	29 mm	77 mm	67 mm
		B	13 mm	31 mm	55 mm
		C	563 mm	586 mm	586 mm
	Label Position		Y	Y	X

Unit : mm

SO type			SO4	SO6	SO8	SO16
Magazine	Dimensions		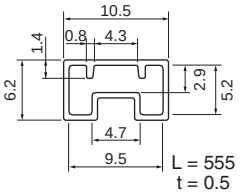	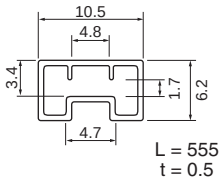	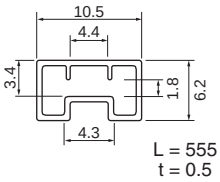	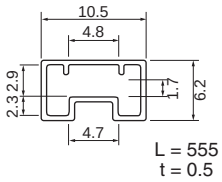
	Quantities per Magazine		175 pcs	125 pcs	100 pcs	50 pcs
Carton	Number of Magazines		40	40	24	40
	Carton Dimensions	A	71 mm	70 mm	75 mm	61 mm
		B	32 mm	55 mm	29 mm	56 mm
		C	584 mm	585 mm	579 mm	586 mm
	Label Position		X	X	X	X

Unit: mm

SOL type		SOL/SOL (LF4)		
Magazine	Dimensions	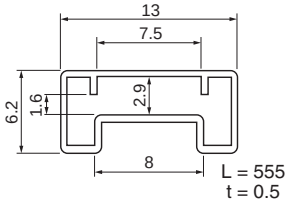		
	Pin Count	6 pin (SO6L)	8 pin (SO8L)	16 pin (SO16L)
	Quantities per Magazine	125 pcs	75 pcs	50 pcs
Carton	Number of Magazines	20		
	Carton Dimensions A	70 mm		
	Carton Dimensions B	30 mm		
	Carton Dimensions C	585 mm		
	Label Position	Y		

※ All dimensions are typical values.

Packing

Photocouplers are stored in magazines, and packed into cartons. An overview of the procedure of packing the device is shown below.

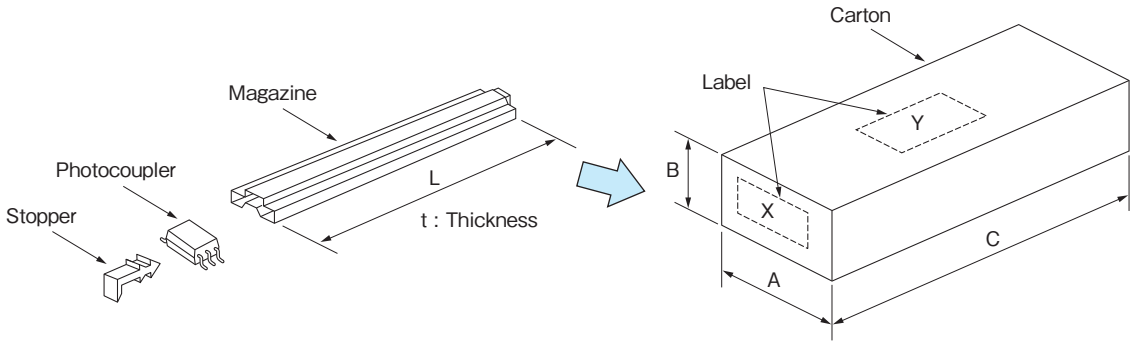

Tape-and-Reel Specification

Tape and Reel Dimensions

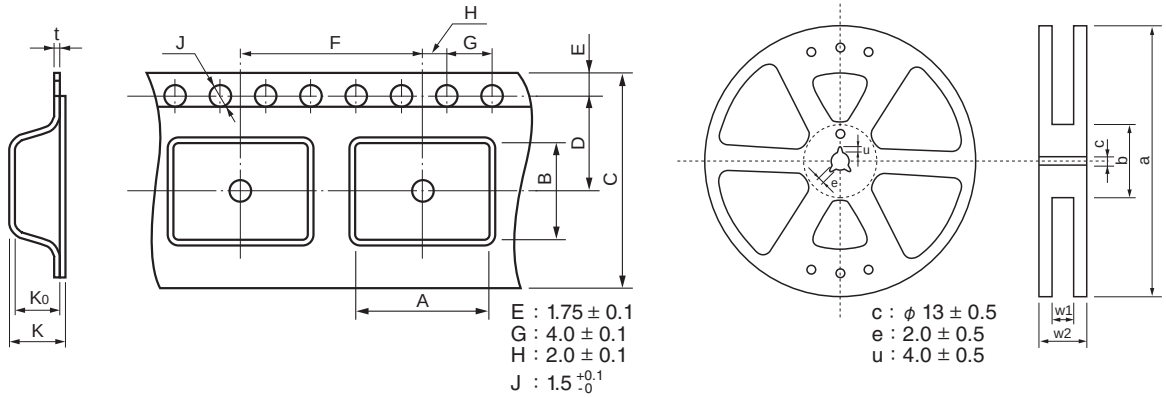

Unit: mm

Package		DIP (LF1) (LF5)	DIP (LF4)	SDIP6	SDIP6 F type	4 pin/5 pin MFSOP6	2.54SOP4	2.54SOP6	2.54SOP8	SSOP4	USOP4	VSON4	S-VSON4
Taping		(TP1) (TP5)	(TP4)	(TP)	(TP)	(TPL) (TPR)	(TP)	(TP)	(TP)	(TP15)	(TP15)	(TP)	(TP)
Tape Dimensions	A	10.4 ± 0.1	12.3 ± 0.1	10.4 ± 0.1	12.3 ± 0.1	4.2 ± 0.1	4.3 ± 0.1	7.5 ± 0.1	7.5 ± 0.1	2.35 ± 0.2	2.6 ± 0.1	1.6 ± 0.1	1.6 ± 0.1
	B	(*1)	(*1)	5.1 ± 0.1	5.1 ± 0.1	7.6 ± 0.1	7.5 ± 0.1	6.7 ± 0.1	10.5 ± 0.1	4.5 ± 0.1	3.55 ± 0.1	3.0 ± 0.1	2.25 ± 0.1
	C	16.3 ± 0.3		16.3 ± 0.3		12.3 ± 0.3	12.0 ± 0.3	16.0 ± 0.3		12.0 ± 0.3		8.0 ± 0.3	8.0 ± 0.2
	D	7.5 ± 0.1		7.5 ± 0.1		5.5 ± 0.1	5.5 ± 0.1	7.5 ± 0.1		5.5 ± 0.1		3.5 ± 0.1	
	F	12.0 ± 0.1	16.0 ± 0.1	12.0 ± 0.1	16.0 ± 0.1	8.0 ± 0.1	8.0 ± 0.1	12.0 ± 0.1		4.0 ± 0.1		4.0 ± 0.1	
	K	4.55 ± 0.2		4.55 ± 0.2		3.15 ± 0.2	2.6 ± 0.2	2.5 ± 0.2	2.4 ± 0.2	2.4 ± 0.2	(2.0 ± 0.1)	(1.8 ± 0.1)	
	K0	4.1 ± 0.1		4.1 ± 0.1		2.7 ± 0.1	2.4 ± 0.1	2.3 ± 0.1	2.2 ± 0.1	2.1 ± 0.1	1.95 ± 0.1	1.5 ± 0.1	1.85 ± 0.1
	t	0.4 ± 0.05		0.4 ± 0.05		0.3 ± 0.05	0.3 ± 0.05			0.3 ± 0.05	0.3 ± 0.1	0.2 ± 0.05	0.2 ± 0.05
Reel Dimensions	a	ϕ 380 ± 2		ϕ 380 ± 2		ϕ 380 ± 2	ϕ 330 ± 2			ϕ 180 $^{+0}_{-4}$		ϕ 180 ± 3	
	b	ϕ 80 ± 1		ϕ 80 ± 1		ϕ 80 ± 1	ϕ 80 ± 1			ϕ 60 ± 1		ϕ 60 ± 1	
	w1	17.5 ± 0.5		17.5 ± 0.5		13.5 ± 0.5	13.5 ± 0.5	17.5 ± 0.5		13.0 ± 0.3		9.0 ± 0.3	
	w2	21.5 ± 1.0		21.5 ± 1.0		17.5 ± 1.0	17.5 ± 1.0	21.5 ± 1.0		15.4 ± 1.0		11.4 ± 1.0	

Package		SO4	4 pin/5 pin SO6	SO8	SO16	4 pin SO6L	SO6L	SO8L	SO16L	SO6L (LF4)	SO8L (LF4)
Taping		(TP)	(TPL) (TPR)	(TP)	(TP)	(TPL) (TPR)	(TP)	(TL)	(TP)	(TP4)	(TP4)
Tape Dimensions	A	3.1 ± 0.1	4.0 ± 0.1	6.5 ± 0.1	7.5 ± 0.1	4.24 ± 0.1	10.4 ± 0.1	11.55 ± 0.1	10.4 ± 0.1	11.55 ± 0.1	11.55 ± 0.1
	B	7.5 ± 0.1	7.6 ± 0.1	5.6 ± 0.1	10.5 ± 0.1	10.4 ± 0.1	4.24 ± 0.1	6.35 ± 0.1	10.7 ± 0.1	4.24 ± 0.1	6.35 ± 0.1
	C	12.0 ± 0.3			16.0 ± 0.3	16.0 ± 0.3				16.0 ± 0.3	
	D	5.5 ± 0.1			7.5 ± 0.1	7.5 ± 0.1				7.5 ± 0.1	
	F	8.0 ± 0.1			12.0 ± 0.1	8.0 ± 0.1	12.0 ± 0.1	16.0 ± 0.1	12.0 ± 0.1	16.0 ± 0.1	
	K	3.15 ± 0.2	2.9 ± 0.2	3.4 ± 0.2	2.6 ± 0.2	2.7 ± 0.1	(2.7 ± 0.1)	2.8 ± 0.1	(2.7 ± 0.1)	2.7 ± 0.1	2.8 ± 0.1
	K0	2.3 ± 0.1	2.6 ± 0.1	3.1 ± 0.1	2.2 ± 0.1	2.4 ± 0.1				2.4 ± 0.1	
	t	0.3 ± 0.05				0.3 ± 0.05				0.3 ± 0.05	
Reel Dimensions	a	ϕ 330 ± 2				ϕ 330 ± 2				ϕ 330 ± 2	
	b	ϕ 80 ± 1				ϕ 100 ± 1				ϕ 100 ± 1	
	w1	13.5 ± 0.5			17.5 ± 0.5	17.4 ± 1.0				17.4 ± 1.0	
	w2	17.5 ± 1.0			21.5 ± 1.0	21.4 ± 1.0				21.4 ± 1.0	

(*1) : Typical devices

DIP4	5.1 ± 0.1
DIP6	7.6 ± 0.1
DIP8	10.1 ± 0.1 (TP4) is not available.

Photocouplers direction on Tape

Photocouplers are put in cavity, as shown below.

Device Orientation on Tape	Tape Option	Package Type	Packing Quantity (pcs/reel)
User direction of feed 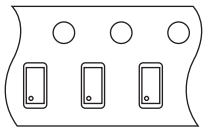	TP	S-VSON4	3,000
		VSON4	3,000
User direction of feed 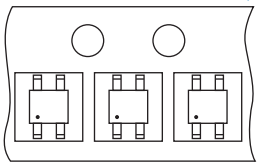	TP15	USOP4	1,500
		SSOP4	1,500
	TP	2.54SOP4	2.500
		SO4	2,500
	TPL	4 pin/5 pin MFSOP6	3,000
		SO4	2,500
		4 pin/5 pin SO6	3,000
		4 pin SO6L	3,000
User direction of feed 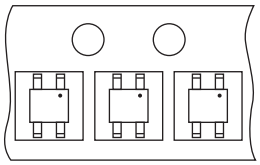	TPR	4 pin/5 pin MFSOP6	3,000
		SO4	2,500
		4 pin/5 pin SO6	3,000
		4 pin SO6L	3,000
User direction of feed 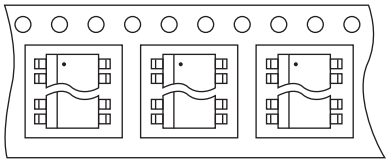	TP	2.54SOP6	2,500
		2.54SOP8	2,500
		SO8	2,500
		SO16	2,000
		SO6L	1,500
	TL	SO8L	1,500
	TP	SO16L	1,500
	TP4	SO6L (LF4)	1,500
		SO8L (LF4)	1,500
	TP	SDIP6	1,500
		SDIP6 (F type)	1,000
	TP1	DIP (LF1)	1,500
	TP4	DIP (LF4)	1,000
	TP5	DIP (LF5)	1,500

The standard taping specification is presented herein. The taping specification and name for some products may be different. For details, see technical datasheets for individual products.

Projected Operating Life of Photocouplers

Toshiba photocouplers use one of four types of LEDs and a projection of the operating life has been estimated for each LED. See the following pages for the projected operating life data for LEDs and the types of LEDs used in each photocoupler. The projected operating life data should be considered only as references as they are estimates for a single production lot based on long-term data.

(1) Projected Operating Life Based on LED Efficiency Degradation

	Projected Operating Life (1)		Photocouplers
	F50% operating life (2)	F0.1% operating life (3)	
① GaAs LED	1,300,000 h	260,000 h	Mainly for phototransistor output devices and phototriac output devices
② GaAℓAs(SH) LED	540,000 h	100,000 h	Mainly for photo-IC couplers
③ GaAℓAs(DH) LED	1,000,000 h	200,000 h	Mainly for photorelays (MOSFET output), photovoltaic couplers and photo-IC couplers
④ GaAℓAs (MQW) LED	Ask your local Toshiba sales representative.		Mainly for photo-IC couplers

(1) Ta = 40˚C, I_F = 20 mA, failure criteria: degradation rate ΔPo < -50%
(2) Cumulative failure rate 50%: Time period until the projected long-term light output degradation curve of the average light output change ($\bar{X}$) shown on pages 20 to 22 reaches the failure criteria.
(3) Cumulative failure rate 0.1%: Time period until the projected long-term light output degradation curve of $\bar{X} - 3\sigma$ shown on pages 20 to 22 reaches the failure criteria.
* SH：Single Hetero-junction
* DH：Double Hetero-junction
* MQW：Multiple Quantum Well

The relationship between LED light output degradation and optical coupling characteristics is shown below.

● The relationship between LED light output degradation and current transfer ratio (CTR)/short circuit current (I_{SC}) is 1:1.

$$\frac{CTR\ (t)}{CTR\ (0)} = \frac{Po\ (t)}{Po\ (0)}$$

● The relationship between a reciprocal value of LED light output degradation and $I_{FT}/I_{FLH}/I_{FHL}/I_{FH}$ change is 1:1.

$$\frac{I_{FT}\ (t)}{I_{FT}\ (0)} = \left(\frac{Po\ (t)}{Po\ (0)}\right)^{-1}$$

(2) Reading the Projected LED Operating Life Graph

The operating life of the GaAs LED is estimated based on the data shown on page 20. Here is an example of how to read an operating life, assuming that the ambient temperature (Ta) is 40˚C and that the failure criterion is a 30% decrease in light output. Suppose that the initial LED current, I_F, is 20 mA.

Since the horizontal axis of the failure criteria graph is the reciprocal of absolute temperature, it is necessary to convert the ambient temperature (Ta) to the reciprocal of absolute temperature (T):

$$T = \frac{1}{Ta + 273.15} = \frac{1}{40 + 273.15} \fallingdotseq 3.19 \times 10^{-3}$$

The graph shows the projected lifetimes for F50% and F0.1% cumulative failure probabilities in solid and dashed lines respectively. Normally, it is recommended to use F0.1% lines.
As X = 3.19, its intersection with the I_F = 20 mA line for F0.1% is approximately 80,000 hours. (This figure is for reference only.)

(e) Failure criteria for light output degradation ΔPo<−30%

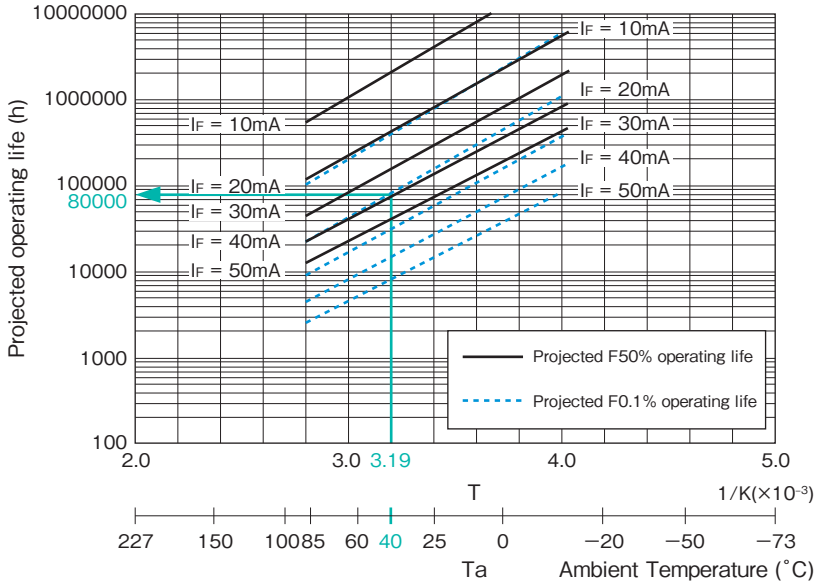

You can also estimate the projected operating lifetimes from the projected light output degradation data.

(b) Test conditions: I_F = 20 mA, Ta = 40˚C

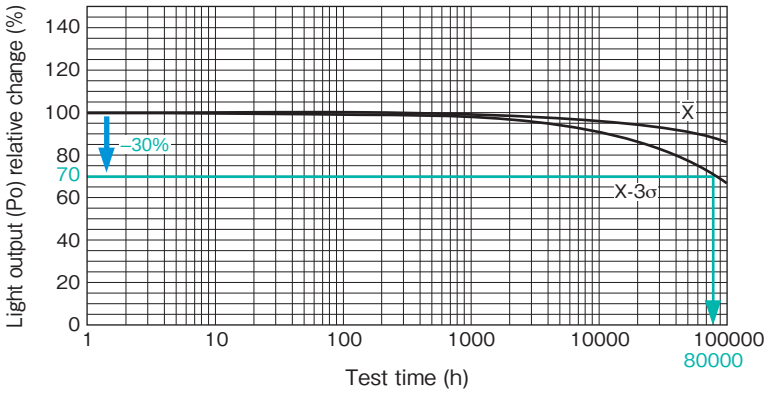

(3) Projected Operating Life Data

① GaAs LED

Projected Light Output Degradation Data

(a) Test conditions: I_F = **50 mA**, Ta = 40˚C

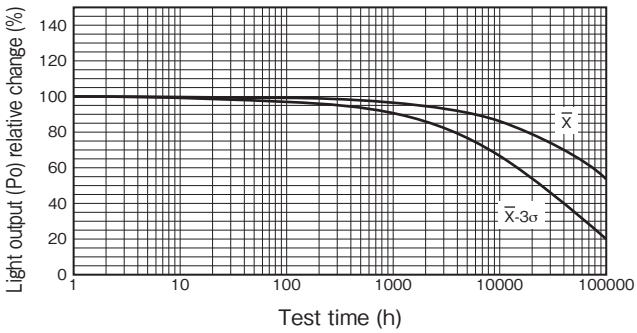

(b) Test conditions: I_F = **20 mA**, Ta = 40˚C

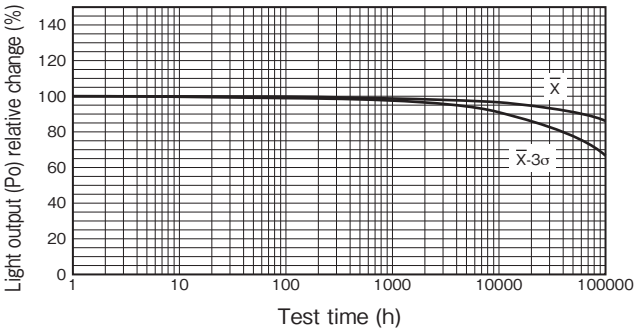

(c) Test conditions: I_F = **10 mA**, Ta = 40˚C

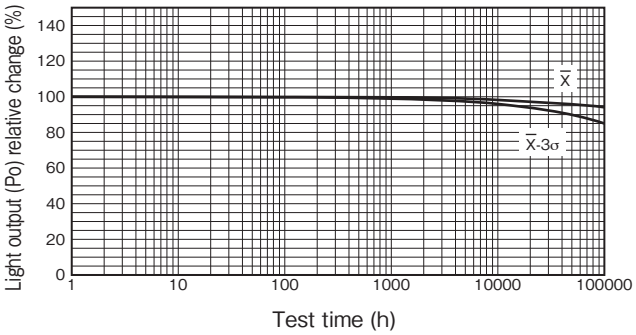

Projected Operating Life Data

(d) Failure criteria for light output degradation **ΔPo<-50%**

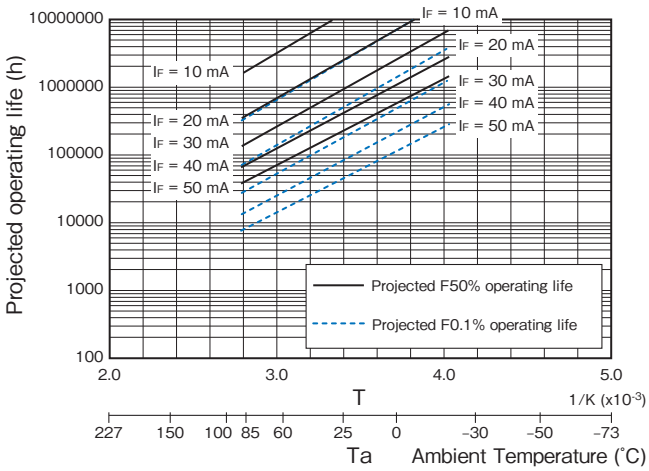

(e) Failure criteria for light output degradation **ΔPo<-30%**

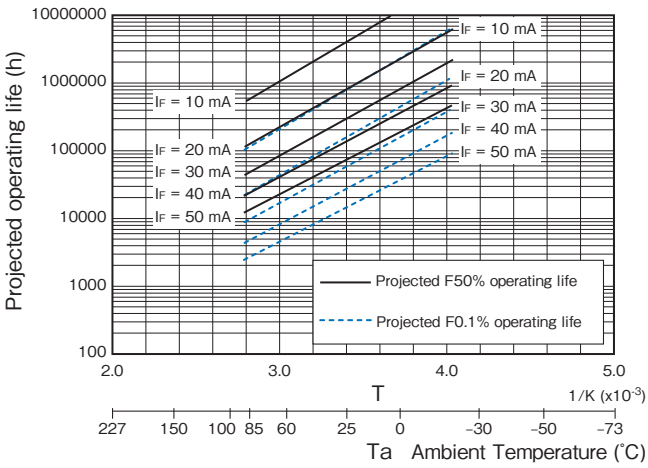

The above operating life data are estimates extrapolated from long-term light output degradation over a single wafer lot and are shown as reference only. Operating conditions exceeding the maximum ratings are not guaranteed.

② GaAℓAs (SH) LED

Projected Light Output Degradation Data

(a) Test conditions: I_F = **50 mA**, Ta = 40˚C

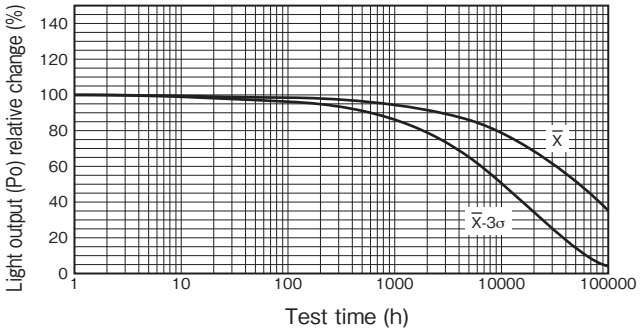

(b) Test conditions: I_F = **20 mA**, Ta = 40˚C

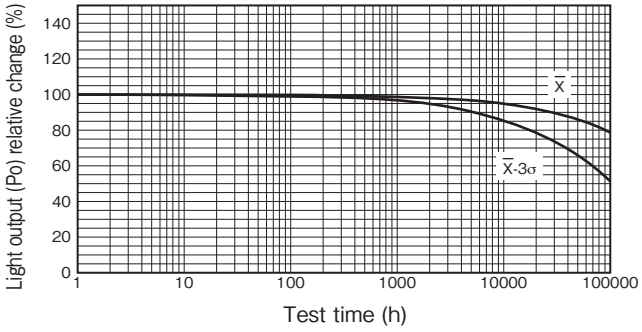

(c) Test conditions: I_F = **10 mA**, Ta = 40˚C

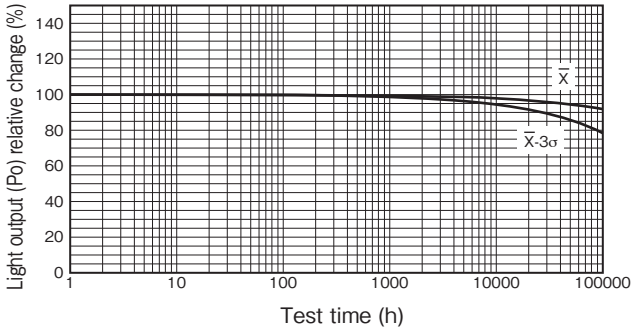

Projected Operating Life Data

(d) Failure criteria for light output degradation **ΔPo<-50%**

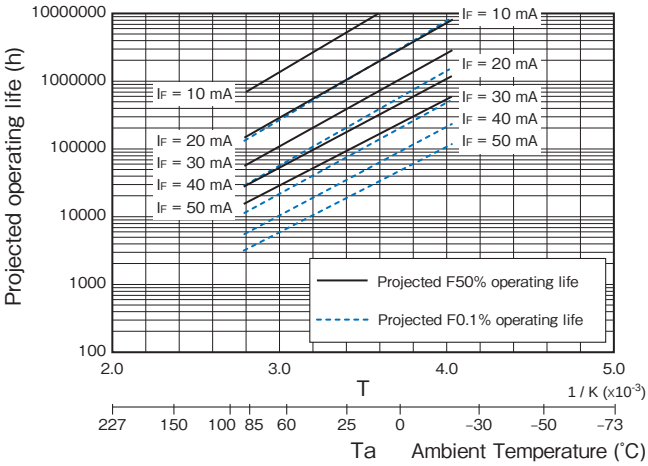

(e) Failure criteria for light output degradation **ΔPo<-30%**

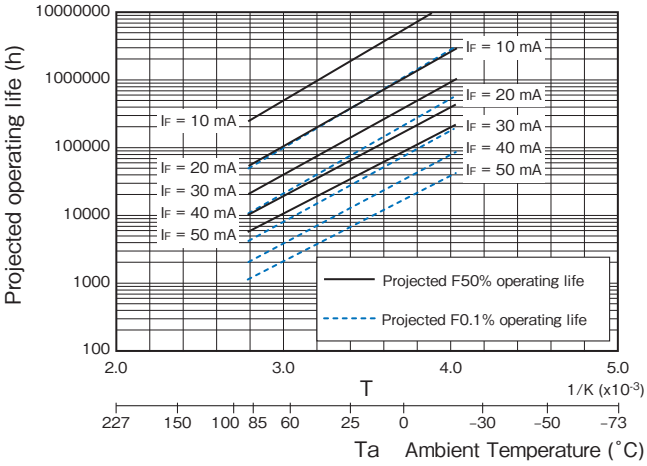

The above operating life data are estimates extrapolated from long-term light output degradation over a single wafer lot and are shown as reference only. Operating conditions exceeding the maximum ratings are not guaranteed.

③ GaAℓAs (DH) LED

Projected Light Output Degradation Data

(a) Test conditions: I_F = **50 mA**, Ta = 40˚C

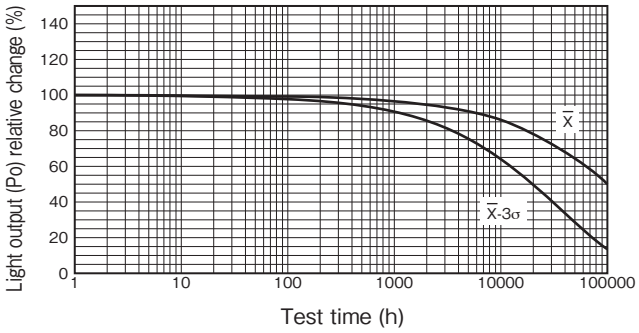

(b) Test conditions: I_F = **20 mA**, Ta = 40˚C

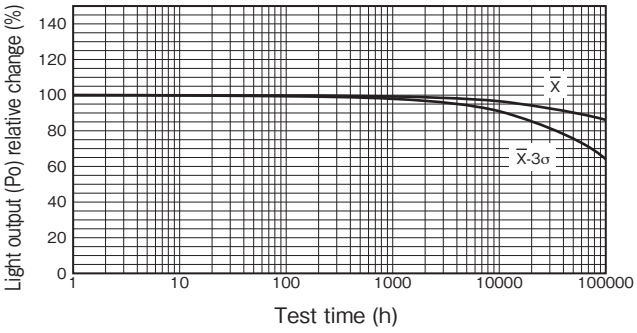

(c) Test conditions: I_F = **10 mA**, Ta = 40˚C

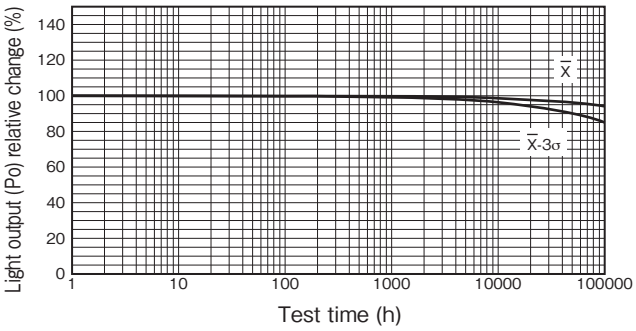

Projected Operating Life Data

(d) Failure criteria for light output degradation **ΔPo<-50%**

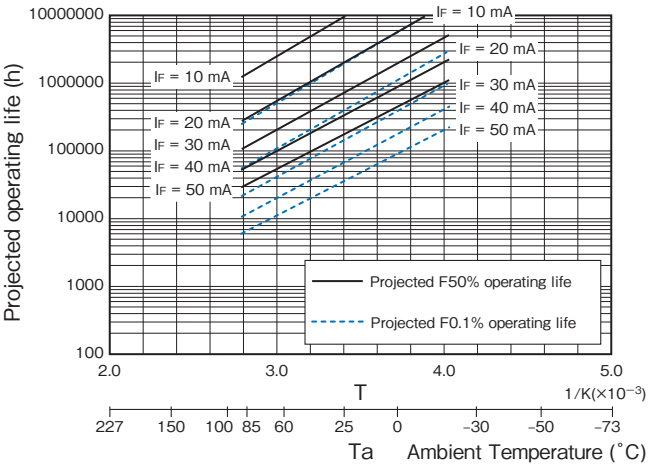

(e) Failure criteria for light output degradation **ΔPo<-30%**

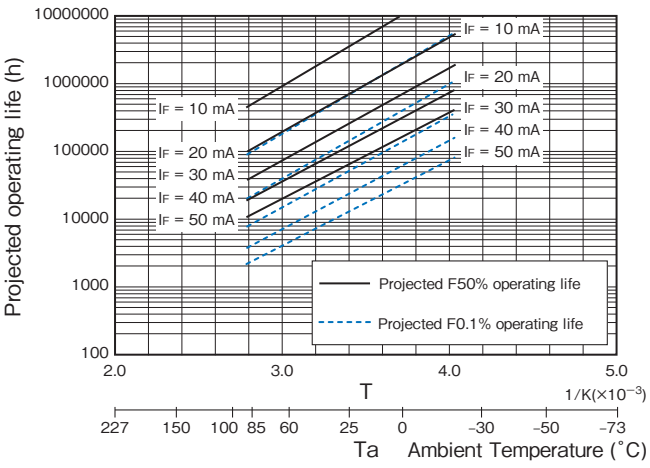

The above operating life data are estimates extrapolated from long-term light output degradation over a single wafer lot and are shown as reference only. Operating conditions exceeding the maximum ratings are not guaranteed.

④ GaAℓAs (MQW) LED

Projected Light Output Degradation and Operating Life Data

Toshiba is now preparing the light output degradation and operating life data for GaAℓAs (MQW) LEDs.
These data are available for individual LEDs. Ask your local Toshiba sales representative.

(4) LEDs Used in Photocouplers

LED: ① GaAs ② GaAℓAs (SH) ③ GaAℓAs (DH) ④ GaAℓAs (MQW)

Photocouplers	LED	Photocouplers	LED	Photocouplers	LED	Photocouplers	LED	Photorelays	LED
TLP1xx		TLP557	②	TLP2370	④	TLP5231	④	TLP170 Series	①
TLP104	④	TLP590B	③	TLP2391	④	TLP5701	④	TLP171 Series	④
TLP109	④	TLP591B	③	TLP2395	④	TLP5702	④	TLP172 Series	①
TLP109(IGM)	④	TLP6xx		TLP2398	④	TLP5751	④	TLP174G Series	①
TLP116A	④	TLP627	①	TLP24xx		TLP5752	④	TLP175A	④
TLP118	④	TLP663J(S)	①	TLP2403	④	TLP5754	④	TLP176 Series	①
TLP148G	①	TLP668J(S)	③	TLP2404	④	TLP5771	④	TLP192 Series	①
TLP151A	④	TLP669L(S)	④	TLP2405	④	TLP5772	④	TLP197 Series	①
TLP152	④	TLP7xx		TLP2408	④	TLP5774	④	TLP200D	①
TLP155	④	TLP700	④	TLP2409	④	TLP5832	④	TLP202 Series	①
TLP155E	④	TLP700A	④	TLP2418	④	TLP7xxx		TLP206 Series	①
TLP163J	①	TLP700H	④	TLP2451A	④	TLP7820	④	TLP222 Series	①
TLP182	④	TLP701	②	TLP2466	④	TLP7830	④	TLP224G Series	①
TLP183	④	TLP701A	④	TLP2468	④	TLP7920	④	TLP225A	①
TLP184(SE	①	TLP701H	④	TLP25xx		TLP7930	④	TLP227 Series	①
TLP185(SE	①	TLP705A	④	TLP2530	②	TLX9xxx		TLP228 Series	①
TLP187	④	TLP714	④	TLP2531	②	TLX9000	④	TLP240 Series	④
TLP188	④	TLP715	②	TLP26xx		TLX9175J	④	TLP241A	④
TLP190B	③	TLP718	②	TLP2662	④	TLX9185A	④	TLP592 Series	①
TLP191B	③	TLP719	②	TLP27xx		TLX9291A	④	TLP597 Series	①
TLP2xx		TLP731	①	TLP2701	④	TLX9300	④	TLP598 Series	③
TLP250H	④	TLP732	①	TLP2703	④	TLX9304	④	TLP797 Series	①
TLP265J	④	TLP748J	①	TLP2704	④	TLX9310	④	TLP798GA	③
TLP266J	④	TLP754	④	TLP2709	④	TLX9376	④	TLP31xx Series	①
TLP267J	④	TLP759	②	TLP2710	④	TLX9378	④	TLP3203	①
TLP268J	④	TLP785	①	TLP2735	④	TLX9905	④	TLP321x Series	①
TLP290(SE	①	TLP20xx		TLP2745	④	TLX9906	④	TLP3220	①
TLP290-4	①	TLP2066	③	TLP2748	④	Other		TLP3230	①
TLP291(SE	①	TLP21xx		TLP2761	④	TLPN137	④	TLP3231	①
TLP291-4	①	TLP2105	②	TLP2766	④			TLP3240	③
TLP292	④	TLP2108	②	TLP2767	④			TLP3241	③
TLP292-4	④	TLP2110	④	TLP2768	④			TLP3250	③
TLP293	④	TLP2118E	④	TLP2768A	④			TLP3275	①
TLP293-4	④	TLP2160	④	TLP2770	④			TLP33xx Series	①
TLP3xx		TLP2161	④	TLP29xx				TLP34xx Series	④
TLP350	②	TLP2167	④	TLP2955	④			TLP35xx Series	③
TLP350H	④	TLP2168	④	TLP2958	④			TLP38xx Series	④
TLP351	②	TLP22xx		TLP2962	④			TLP4xxx Series	①
TLP351A	④	TLP2261	④	TLP30xx					
TLP351H	④	TLP2270	④	TLP3052A	①				
TLP352	④	TLP23xx		TLP3062A	①				
TLP358	④	TLP2301	④	TLP3064(S)	③				
TLP358H	④	TLP2303	④	TLP3073	①				
TLP360J	①	TLP2309	④	TLP3083	①				
TLP361J	①	TLP2310	④	TLP39xx					
TLP363J	①	TLP2345	④	TLP3902	①				
TLP383	④	TLP2348	④	TLP3904	①				
TLP385	①	TLP2355	④	TLP3905	④				
TLP387	④	TLP2358	④	TLP3906	④				
TLP388	④	TLP2361	④	TLP3914	③				
TLP5xx		TLP2362	④	TLP3924	③				
TLP525G	①	TLP2366	④	TLP5xxx					
TLP548J	①	TLP2367	④	TLP5214	④				
TLP549J	①	TLP2368	④	TLP5214A	④				

SUBSIDIARIES AND AFFILIATES

(As of July 1, 2017)

Toshiba America Electronic Components, Inc.
- Irvine, Headquarters
  Tel: (949)462-7700 Fax: (949)462-2200
- Buffalo Grove (Chicago)
  Tel: (847)484-2400 Fax: (847)541-7287
- Duluth/Atlanta
  Tel: (404)639-9520 Fax: (404)634-4434
- El Paso
  Tel: (915)533-4242
- Marlborough
  Tel: (508)481-0034 Fax: (508)481-8828
- Parsippany
  Tel: (973)541-4715 Fax: (973)541-4716
- San Jose
  Tel: (408)526-2400 Fax: (408)526-2410
- Wixom (Detroit)
  Tel: (248)347-2607 Fax: (248)347-2602

Toshiba América do Sul Ltda.
Tel: (011)4083-7978

Toshiba India Private Ltd.
- New Delhi Office
  Tel: (0124)499-6600 Fax: (0124)499-6611
- Bangalore Office
  Tel: (080)251-90800

Toshiba Transmission and Distribution Systems (Vietnam) Ltd.
Tel: (043)776-5950 Fax: (043)776-5956

Toshiba Electronics Europe GmbH
- Düsseldorf Head Office
  Tel: (0211)5296-0 Fax: (0211)5296-400
- France Branch
  Tel: (1)47282181
- Italy Branch
  Tel: (039)68701 Fax:(039)6870205
- Munich Office
  Tel: (089)20302030 Fax: (089)203020310
- Spain Branch
  Tel: (91)660-6794
- Sweden Branch
  Tel: (08)704-0900 Fax: (08)80-8459
- U.K. Branch
  Tel: (1932)841600

Toshiba Electronics Asia (Singapore) Pte. Ltd.
Tel: (65)6278-5252 Fax: (65)6271-5155

Toshiba Electronics Service (Thailand) Co., Ltd.
Tel: (02)835-3491 Fax: (02)835-3490

Toshiba Electronics Trading (Malaysia) Sdn. Bhd.
- Kuala Lumpur Head Office
  Tel: (03)5631-6311 Fax: (03)5631-6307
- Penang Office
  Tel: (04)226-8523 Fax: (04)226-8515

Toshiba Electronics Korea Corporation
Tel: (02)3484-4334 Fax: (02)3484-4302

Toshiba Electronic Components Taiwan Corporation
Tel: (02)2508-9988 Fax: (02)2508-9999

Toshiba Electronics Asia, Ltd.
Tel: 2375-6111 Fax: 2375-0969

Toshiba Electronics (China) Co., Ltd.
- Shanghai Head Office
  Tel: (021)6139-3888 Fax: (021)6190-8288
- Beijing Branch
  Tel: (010)6590-8796 Fax: (010)6590-8791
- Chengdu Branch
  Tel: (028)8675-1773 Fax: (028)8675-1065
- Hangzhou Office
  Tel: (0571)8717-5004 Fax: (0571)8717-5013
- Nanjing Office
  Tel: (025)8689-0070 Fax: (025)5266-5106
- Qingdao Branch
  Tel: (532)8579-3328 Fax: (532)8579-3329
- Shenzhen Branch
  Tel: (0755)3686-0880 Fax: (0755)3686-0816
- Dalian Branch
  Tel: (0411)8368-6882 Fax: (0411)8369-0822
- Xiamen Branch
  Tel: (0592)226-1398 Fax: (0592)226-1399
- GuangZhou Office
  Tel: (020)8732-2646 Fax: (020) 8732-2651
- Shenyang Office
  Tel: (024)3187-3325 Fax: (024)3187-3326
- Xi'an Office
  Tel: (029)8720-3176 Fax: (029)8720-3565
- Wuhan Office
  Tel: (027)8555-7779 Fax: (027)8555-7842

RESTRICTIONS ON PRODUCT USE

Toshiba Corporation and its subsidiaries and affiliates are collectively referred to as “TOSHIBA”.
Hardware, software and systems described in this document are collectively referred to as “Product”.

- TOSHIBA reserves the right to make changes to the information in this document and related Product without notice.
- This document and any information herein may not be reproduced without prior written permission from TOSHIBA. Even with TOSHIBA's written permission, reproduction is permissible only if reproduction is without alteration/omission.
- Though TOSHIBA works continually to improve Product's quality and reliability, Product can malfunction or fail. Customers are responsible for complying with safety standards and for providing adequate designs and safeguards for their hardware, software and systems which minimize risk and avoid situations in which a malfunction or failure of Product could cause loss of human life, bodily injury or damage to property, including data loss or corruption. Before customers use the Product, create designs including the Product, or incorporate the Product into their own applications, customers must also refer to and comply with (a) the latest versions of all relevant TOSHIBA information, including without limitation, this document, the specifications, the data sheets and application notes for Product and the precautions and conditions set forth in the "TOSHIBA Semiconductor Reliability Handbook" and (b) the instructions for the application with which the Product will be used with or for. Customers are solely responsible for all aspects of their own product design or applications, including but not limited to (a) determining the appropriateness of the use of this Product in such design or applications; (b) evaluating and determining the applicability of any information contained in this document, or in charts, diagrams, programs, algorithms, sample application circuits, or any other referenced documents; and (c) validating all operating parameters for such designs and applications. **TOSHIBA ASSUMES NO LIABILITY FOR CUSTOMERS' PRODUCT DESIGN OR APPLICATIONS.**
- **PRODUCT IS NEITHER INTENDED NOR WARRANTED FOR USE IN EQUIPMENTS OR SYSTEMS THAT REQUIRE EXTRAORDINARILY HIGH LEVELS OF QUALITY AND/OR RELIABILITY, AND/OR A MALFUNCTION OR FAILURE OF WHICH MAY CAUSE LOSS OF HUMAN LIFE, BODILY INJURY, SERIOUS PROPERTY DAMAGE AND/OR SERIOUS PUBLIC IMPACT ("UNINTENDED USE").** Except for specific applications as expressly stated in this document, Unintended Use includes, without limitation, equipment used in nuclear facilities, equipment used in the aerospace industry, medical equipment, equipment used for automobiles, trains, ships and other transportation, traffic signaling equipment, equipment used to control combustions or explosions, safety devices, elevators and escalators, devices related to electric power, and equipment used in finance-related fields. **IF YOU USE PRODUCT FOR UNINTENDED USE, TOSHIBA ASSUMES NO LIABILITY FOR PRODUCT. For details, please contact your TOSHIBA sales representative.**
- Do not disassemble, analyze, reverse-engineer, alter, modify, translate or copy Product, whether in whole or in part.
- Product shall not be used for or incorporated into any products or systems whose manufacture, use, or sale is prohibited under any applicable laws or regulations.
- The information contained herein is presented only as guidance for Product use. No responsibility is assumed by TOSHIBA for any infringement of patents or any other intellectual property rights of third parties that may result from the use of Product. No license to any intellectual property right is granted by this document, whether express or implied, by estoppel or otherwise.
- **ABSENT A WRITTEN SIGNED AGREEMENT, EXCEPT AS PROVIDED IN THE RELEVANT TERMS AND CONDITIONS OF SALE FOR PRODUCT, AND TO THE MAXIMUM EXTENT ALLOWABLE BY LAW, TOSHIBA (1) ASSUMES NO LIABILITY WHATSOEVER, INCLUDING WITHOUT LIMITATION, INDIRECT, CONSEQUENTIAL, SPECIAL, OR INCIDENTAL DAMAGES OR LOSS, INCLUDING WITHOUT LIMITATION, LOSS OF PROFITS, LOSS OF OPPORTUNITIES, BUSINESS INTERRUPTION AND LOSS OF DATA, AND (2) DISCLAIMS ANY AND ALL EXPRESS OR IMPLIED WARRANTIES AND CONDITIONS RELATED TO SALE, USE OF PRODUCT, OR INFORMATION, INCLUDING WARRANTIES OR CONDITIONS OF MERCHANTABILITY, FITNESS FOR A PARTICULAR PURPOSE, ACCURACY OF INFORMATION, OR NONINFRINGEMENT.**
- GaAs (Gallium Arsenide) is used in Product. GaAs is harmful to humans if consumed or absorbed, whether in the form of dust or vapor. Handle with care and do not break, cut, crush, grind, dissolve chemically or otherwise expose GaAs in Product..
- Do not use or otherwise make available Product or related software or technology for any military purposes, including without limitation, for the design, development, use, stockpiling or manufacturing of nuclear, chemical, or biological weapons or missile technology products (mass destruction weapons). Product and related software and technology may be controlled under the applicable export laws and regulations including, without limitation, the Japanese Foreign Exchange and Foreign Trade Law and the U.S. Export Administration Regulations. Export and re-export of Product or related software or technology are strictly prohibited except in compliance with all applicable export laws and regulations.
- Please contact your TOSHIBA sales representative for details as to environmental matters such as the RoHS compatibility of Product. Please use Product in compliance with all applicable laws and regulations that regulate the inclusion or use of controlled substances, including without limitation, the EU RoHS Directive. **TOSHIBA ASSUMES NO LIABILITY FOR DAMAGES OR LOSSES OCCURRING AS A RESULT OF NONCOMPLIANCE WITH APPLICABLE LAWS AND REGULATIONS.**

TOSHIBA

TOSHIBA ELECTRONIC DEVICES & STORAGE CORPORATION

Website: https://toshiba.semicon-storage.com/

©2017 TOSHIBA ELECTRONIC DEVICES & STORAGE CORPORATION

Previous edition: BCA0034B
2017-9